Service Manual

OASYS 76 & 88

CONTENTS

1) Block Diagram: Page 2
2) Circuit Diagram: Page 3 - 25
3) Test Mode: Page 26
4) OASYS 88 Parts List: Page 27 - 34
5) OASYS 76 Parts List: Page 35 - 41

1st Edition
Issued date: August 9th, 2005
Issued by: KORG INC.

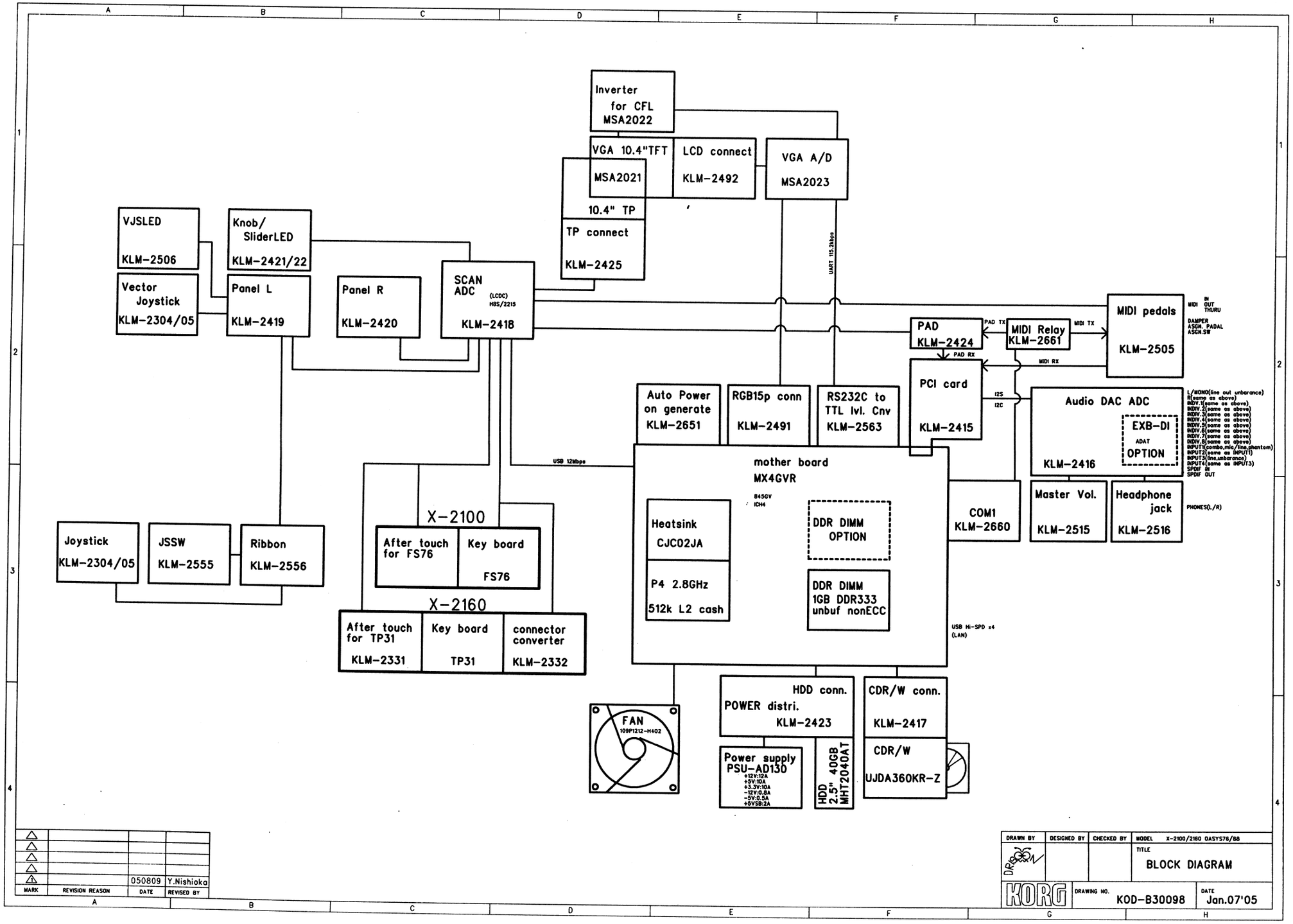

MARK	REVISION REASON	DATE	REVISED BY
1		050809	Y.Nishioka

DRAWN BY	DESIGNED BY	CHECKED BY	MODEL X-2100/2160 OASYS76/88
			TITLE BLOCK DIAGRAM
KORG	DRAWING NO. KOD-B30098		DATE Jan.07'05

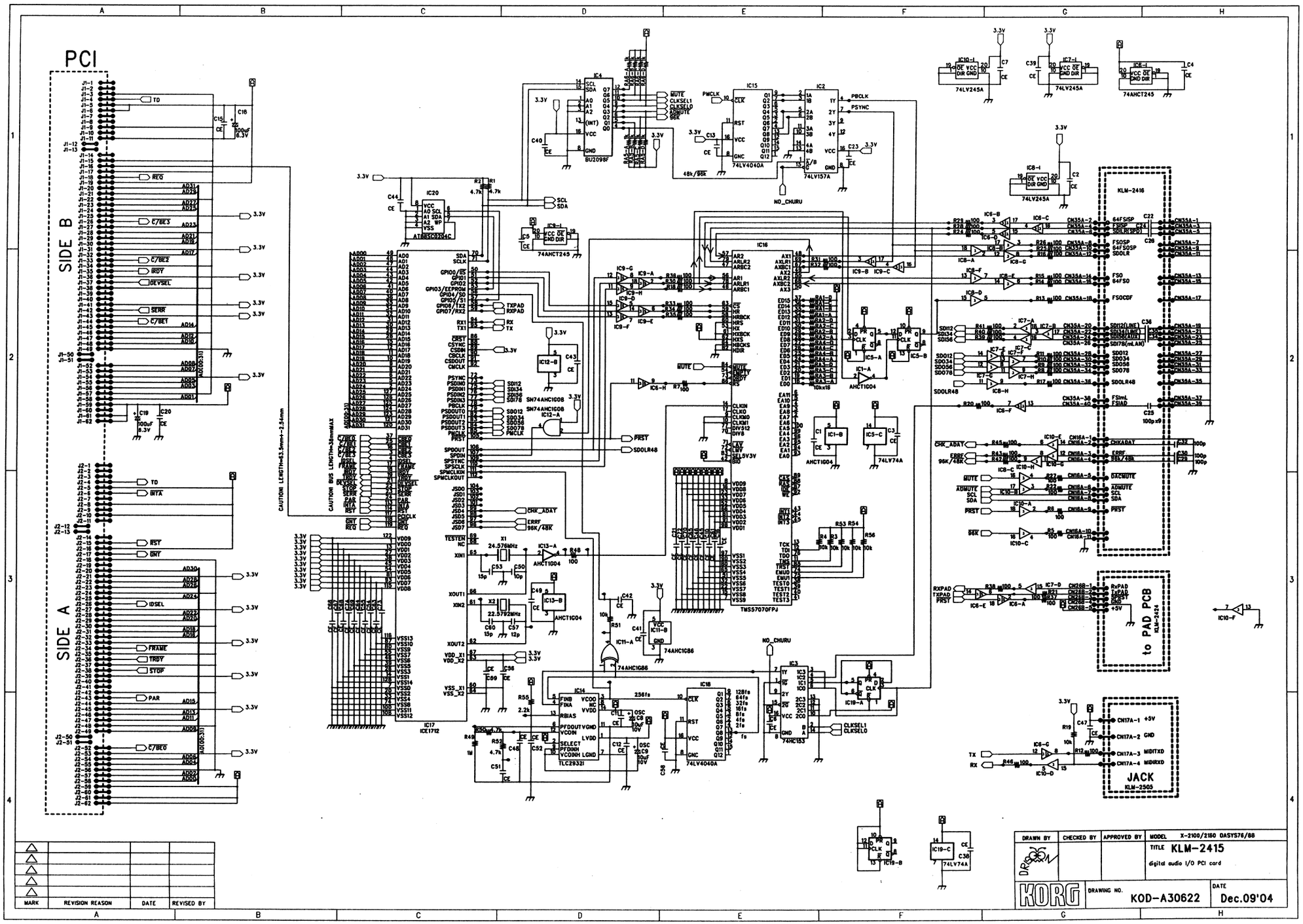
PCI
SIDE B
SIDE A
CAUTION! LENGTH=63.5mm+-2.54mm
CAUTION! BUS LENGTH=38mmMAX
BU2098F
74LV4040A
74LV157A
74LV245A
74AHCT245
AT68SC0204C
SN74AHC1G08
AHCT1G04
74AHC1G86
TMS57070FPJ
74LV74A
74HC153
TLC2932I
ICE1712
KLM-2416
to PAD PCB
KLM-2424
JACK
KLM-2505
MARK
REVISION REASON
DATE
REVISED BY
DRAWN BY
CHECKED BY
APPROVED BY
MODEL X-2100/2150 DASYS76/88
TITLE KLM-2415
digital audio I/O PCI card
KORG
DRAWING NO. KOD-A30622
DATE Dec.09'04

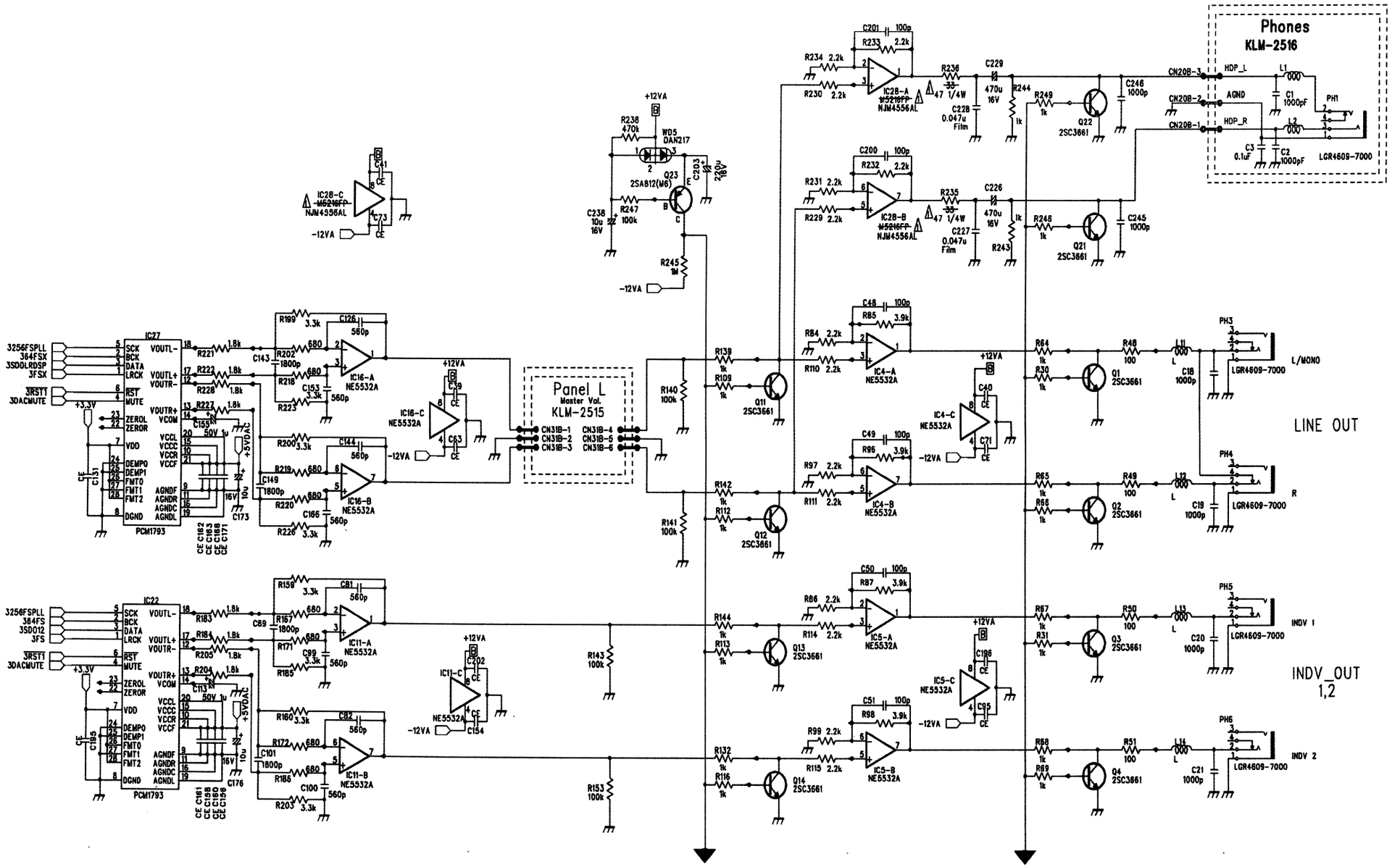
Phones
KLM-2516
Panel L
Master Vol.
KLM-2515
LINE OUT
INDV_OUT
1,2
L/MONO
R
INDV 1
INDV 2
IC27
IC22
PCM1793
IC28-A NJM4556AL
IC28-B NJM4556AL
IC28-C NJM4556AL
IC16-A NE5532A
IC16-B NE5532A
IC16-C NE5532A
IC4-A NE5532A
IC4-B NE5532A
IC4-C NE5532A
IC5-A NE5532A
IC5-B NE5532A
IC5-C NE5532A
IC11-A NE5532A
IC11-B NE5532A
IC11-C NE5532A
Q1 2SC3661
Q2 2SC3661
Q3 2SC3661
Q4 2SC3661
Q11 2SC3661
Q12 2SC3661
Q13 2SC3661
Q14 2SC3661
Q21 2SC3661
Q22 2SC3661
Q23 2SA812(M6)
WD5 DAN217
LGR4609-7000
L:MMZ1608Y102BT
CE:C1608JF1E104
DESIGNED BY
CHECKED BY
APPROVED BY
MODEL X-2100/2160 OASYS76/88
TITLE
AD/DA PCB KLM-2416
DAC part
1/2
KORG
DRAWING NO.
KOD-A30623
DATE
Jan.05'05

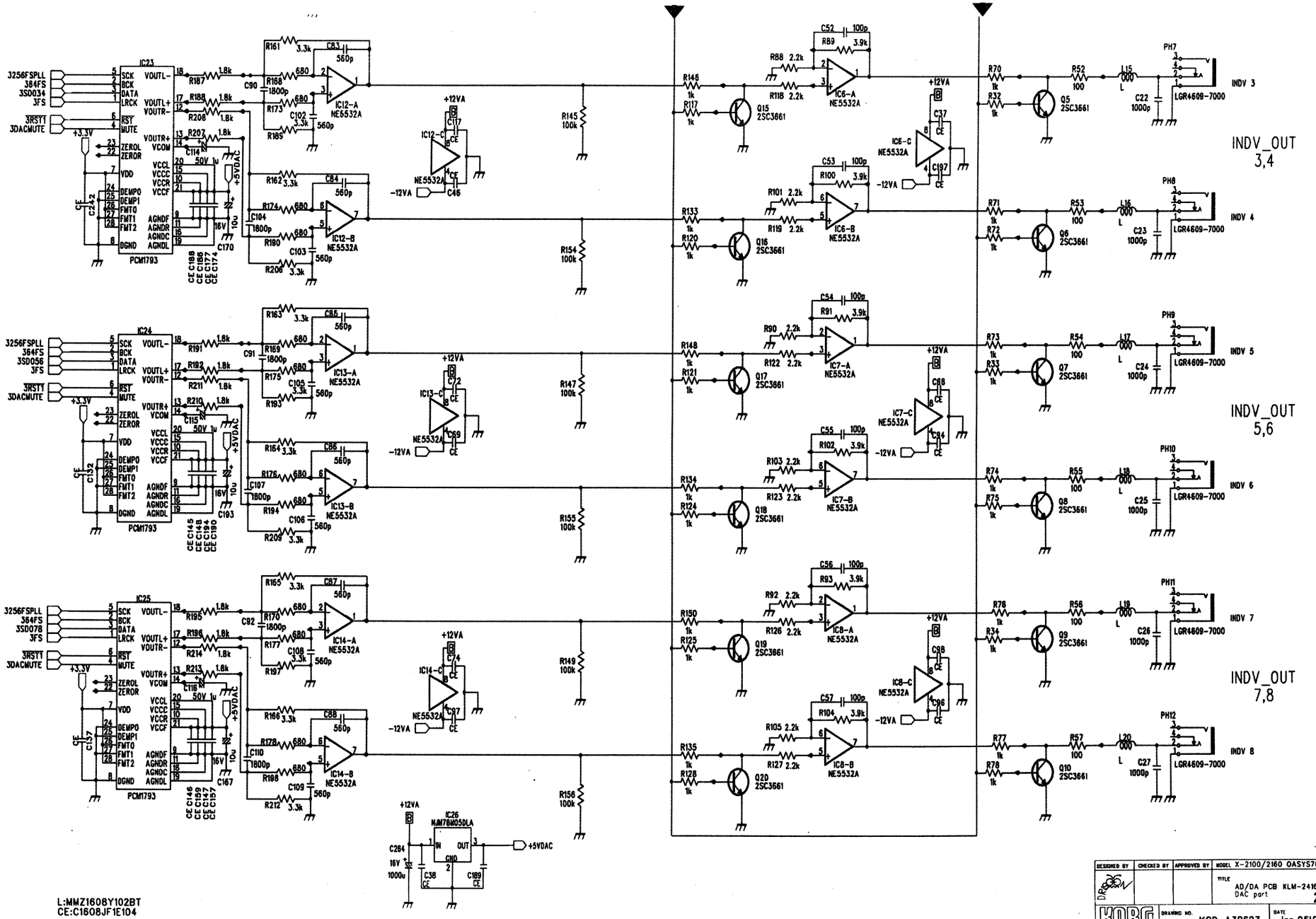

DESIGNED BY	CHECKED BY	APPROVED BY	MODEL X-2100/2160 OASYS76/88
DR			TITLE AD/DA PCB KLM-2416 DAC part 2/2
KORG	DRAWING NO. KOD-A30623		DATE Jan.05'05

AUDIO_IN

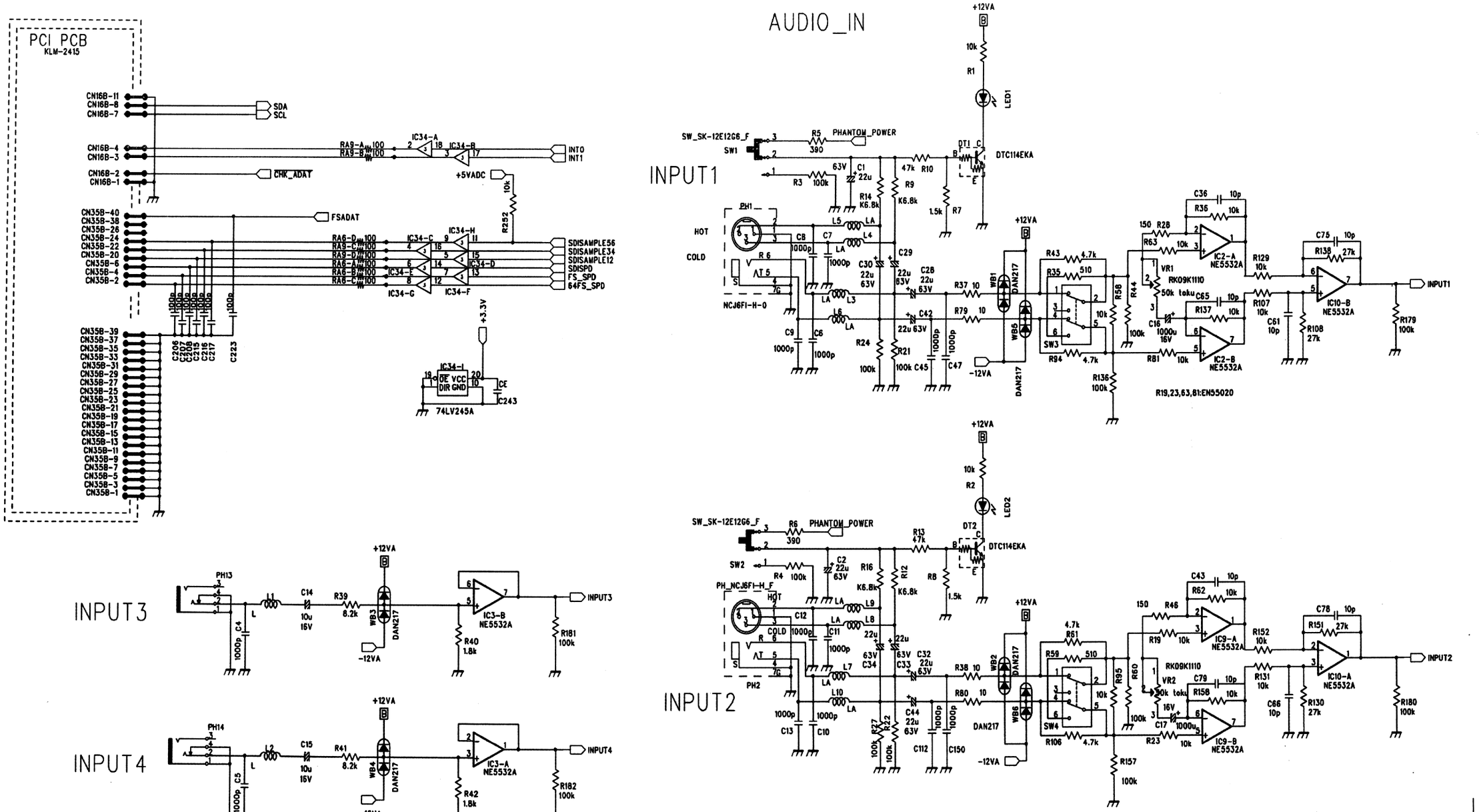

MARK	REVISION REASON	DATE	REVISED BY
△			
△			
△			
△			
△			

LA:MMZ1608R102AT
L:MMZ1608Y102BT
CE:C1608JF1E104

DESIGNED BY	CHECKED BY	APPROVED BY	MODEL X-2100/2160 OASYS76/88
DRAW			TITLE: AD/DA PCB KLM-2416 ADC SPDIF part
KORG	DRAWING NO. KOD-A30624		DATE Jan.05'05

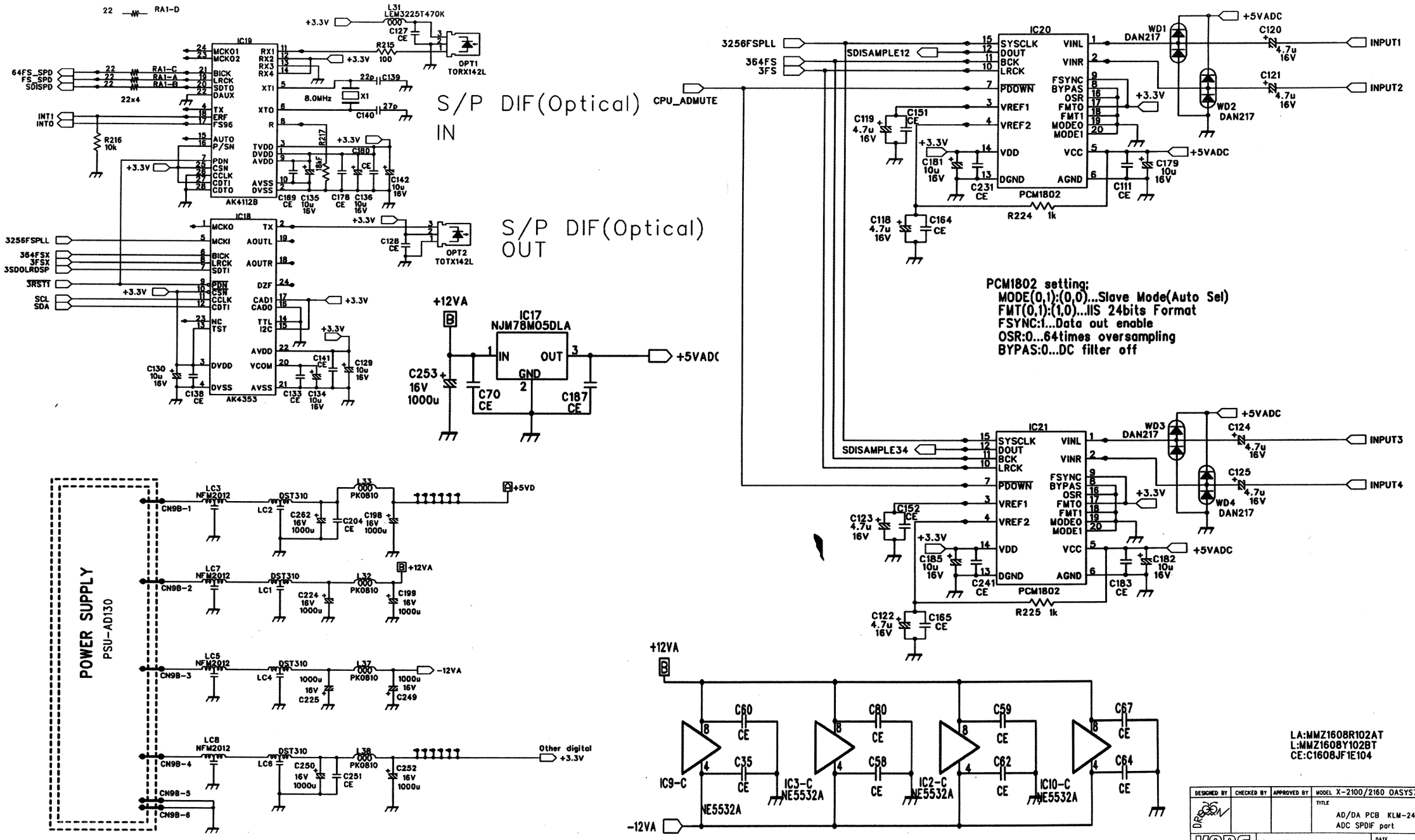
S/P DIF(Optical) IN
S/P DIF(Optical) OUT
IC19
AK4112B
IC18
AK4353
IC17
NJM78M05DLA
IC20
IC21
PCM1802
PCM1802 setting;
MODE(0,1):(0,0)...Slave Mode(Auto Sel)
FMT(0,1):(1,0)...IIS 24bits Format
FSYNC:1...Data out enable
OSR:0...64times oversampling
BYPAS:0...DC filter off
POWER SUPPLY
PSU-AD130
IC9-C NE5532A
IC3-C NE5532A
IC2-C NE5532A
IC10-C NE5532A
LA:MMZ1608R102AT
L:MMZ1608Y102BT
CE:C1608JF1E104
DESIGNED BY
CHECKED BY
APPROVED BY
MODEL X-2100/2160 OASYS76/88
TITLE
AD/DA PCB KLM-2416
ADC SPDIF part
KORG
DRAWING NO. KOD-A30624
DATE Jan.05'05

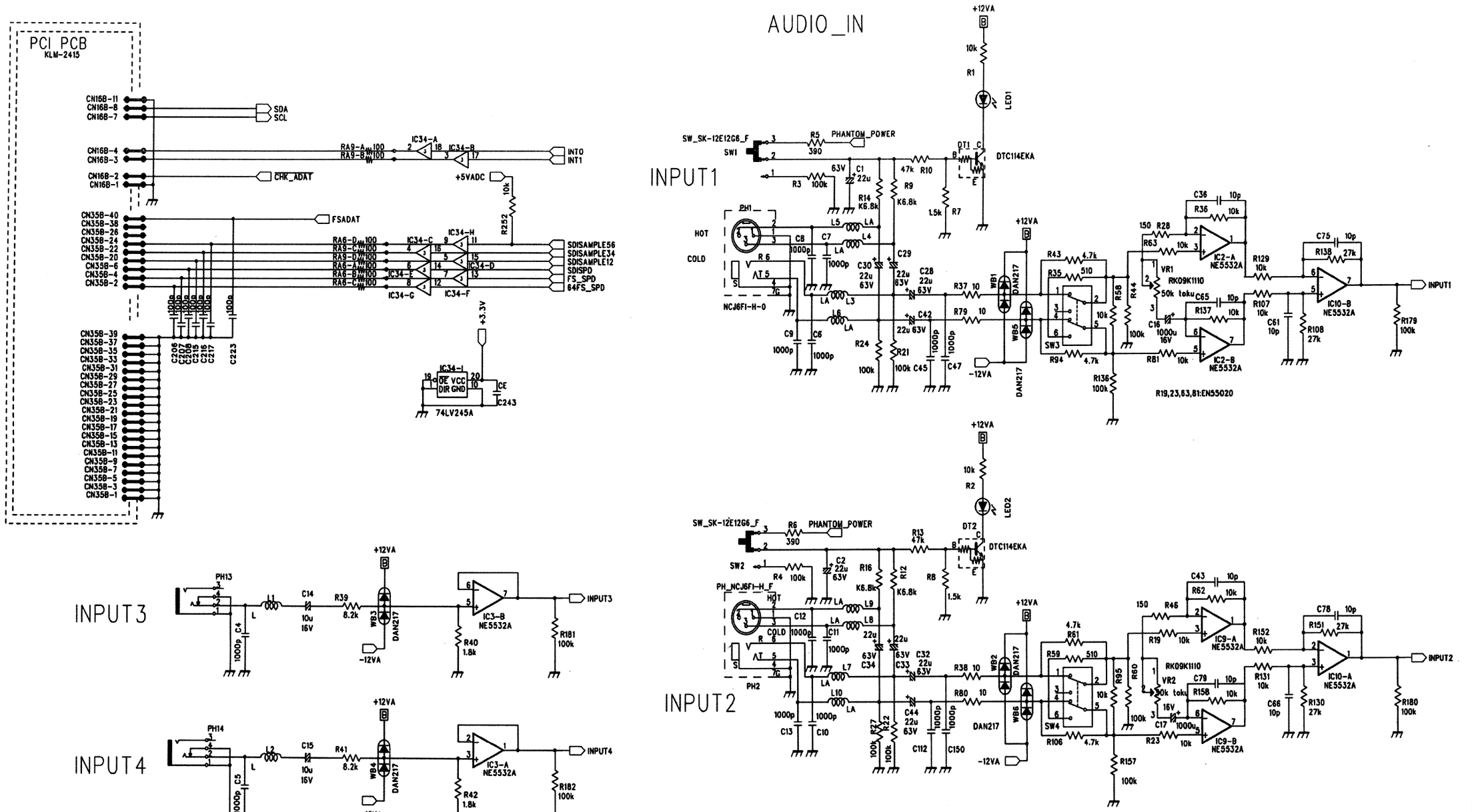

MARK	REVISION REASON	DATE	REVISED BY
△			
△			
△			
△			
△			

DESIGNED BY	CHECKED BY	APPROVED BY	MODEL X-2100/2160 OASYS76/88
DRO			TITLE: AD/DA PCB KLM-2416 ADC SPDIF part
KORG	DRAWING NO. K0D-A30624		DATE Jan.05'05

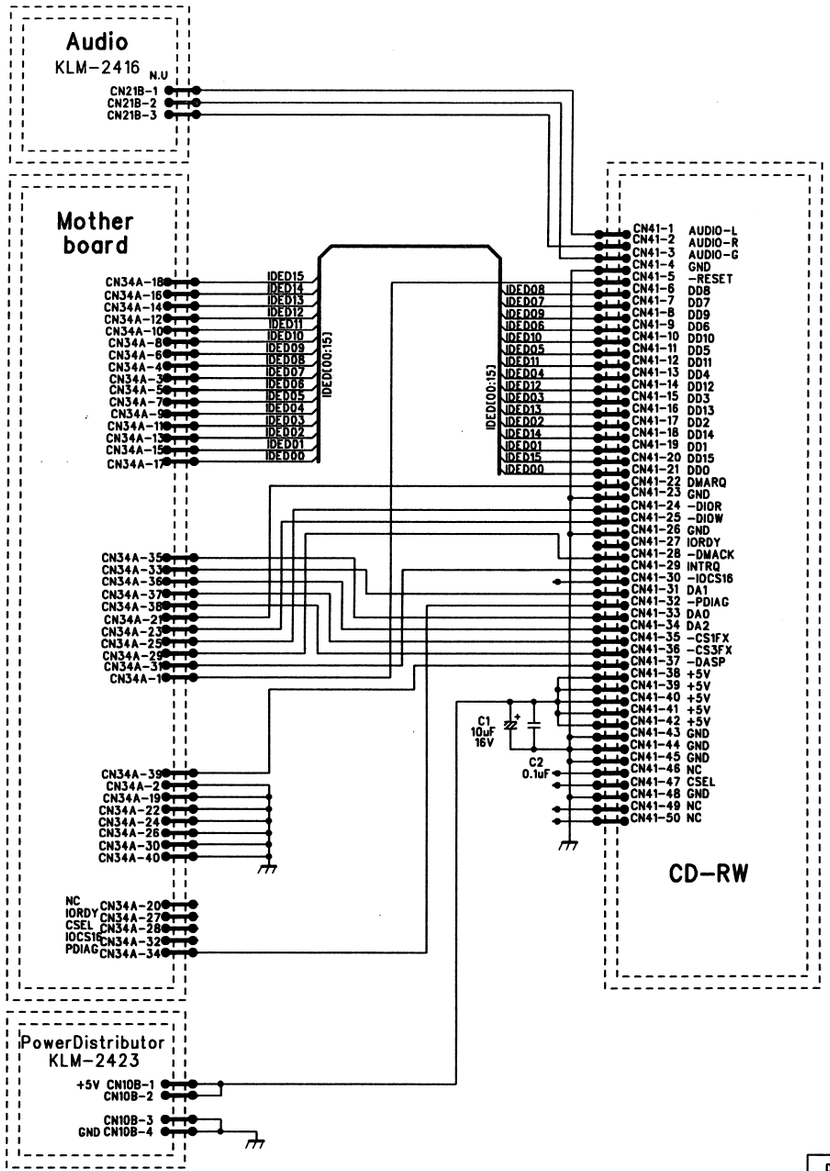

MARK	REVISION REASON	DATE	REVISED BY
△			
△			
△			
△			
△			

DRAWN BY	DESIGNED BY	CHECKED BY	MODEL X-2100/2160
Y.Nishioka	Y.Nishioka		TITLE KLM-2417 CD-RW
KORG	DRAWING NO. KOD-A40584		DATE '04.12.30

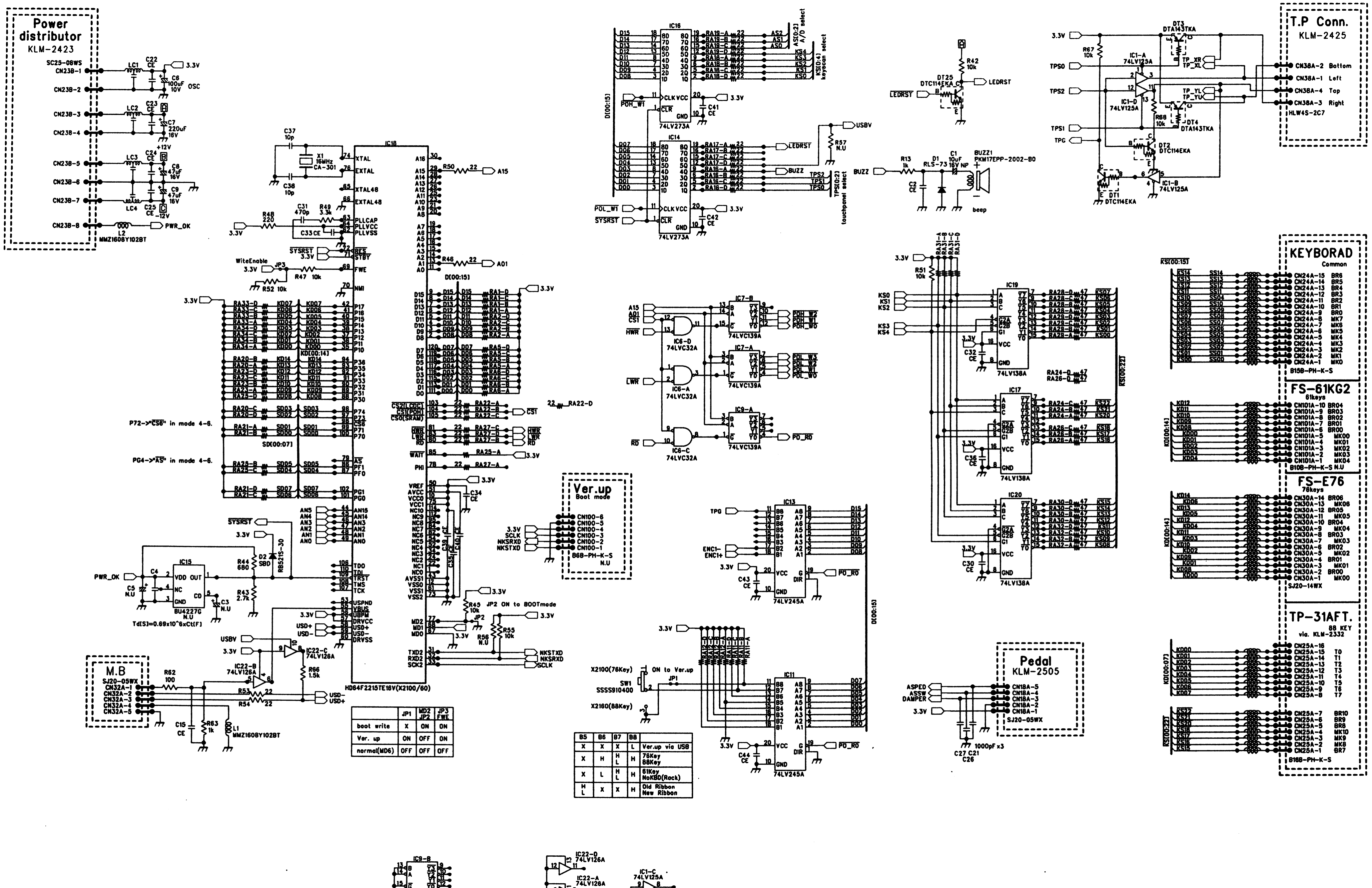

	JP1	MD2 JP2	JP3 FWE
boot write	X	ON	ON
Ver. up	ON	OFF	ON
normal(MD6)	OFF	OFF	OFF

B5	B6	B7	B8	
X	X	X	L	Ver.up via USB
X	H	H L	H	76Key 88Key
X	L	H L	H	61Key NoKBD(Rack)
H L	X	X	H	Old Ribbon New Ribbon

LC:NFM21PC104R1C3D
CE:C1608JF1E104Z
no value RA : 10kohm
no value L : N.U
no value C : N.U

DRAWN BY	DESIGNED BY	CHECKED BY	MODEL X-2100/2160
Y.Nishioka	Y.Nishioka		TITLE KLM-2418 SCAN 1/2

KORG — DRAWING NO. KOD-A30625 — DATE '04.12.23

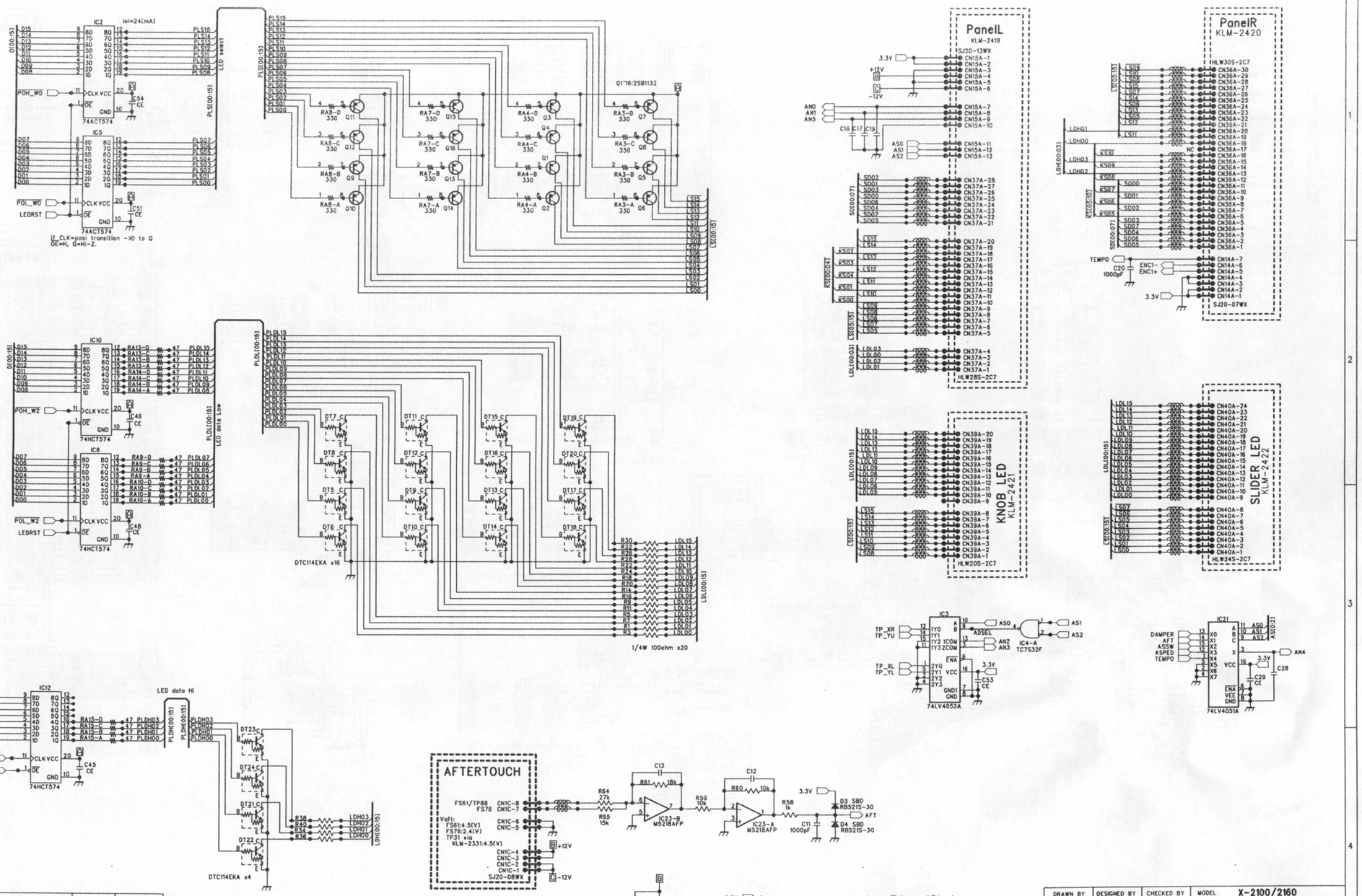

MARK	REVISION REASON	DATE	REVISED BY
△			
△			
△			
△			
△			

DRAWN BY	DESIGNED BY	CHECKED BY	MODEL	X-2100/2160
Y.Nishioka	Y.Nishioka		TITLE	KLM-2418 SCAN 2/2
KORG	DRAWING NO.	KOD-A30626	DATE	'04.12.23

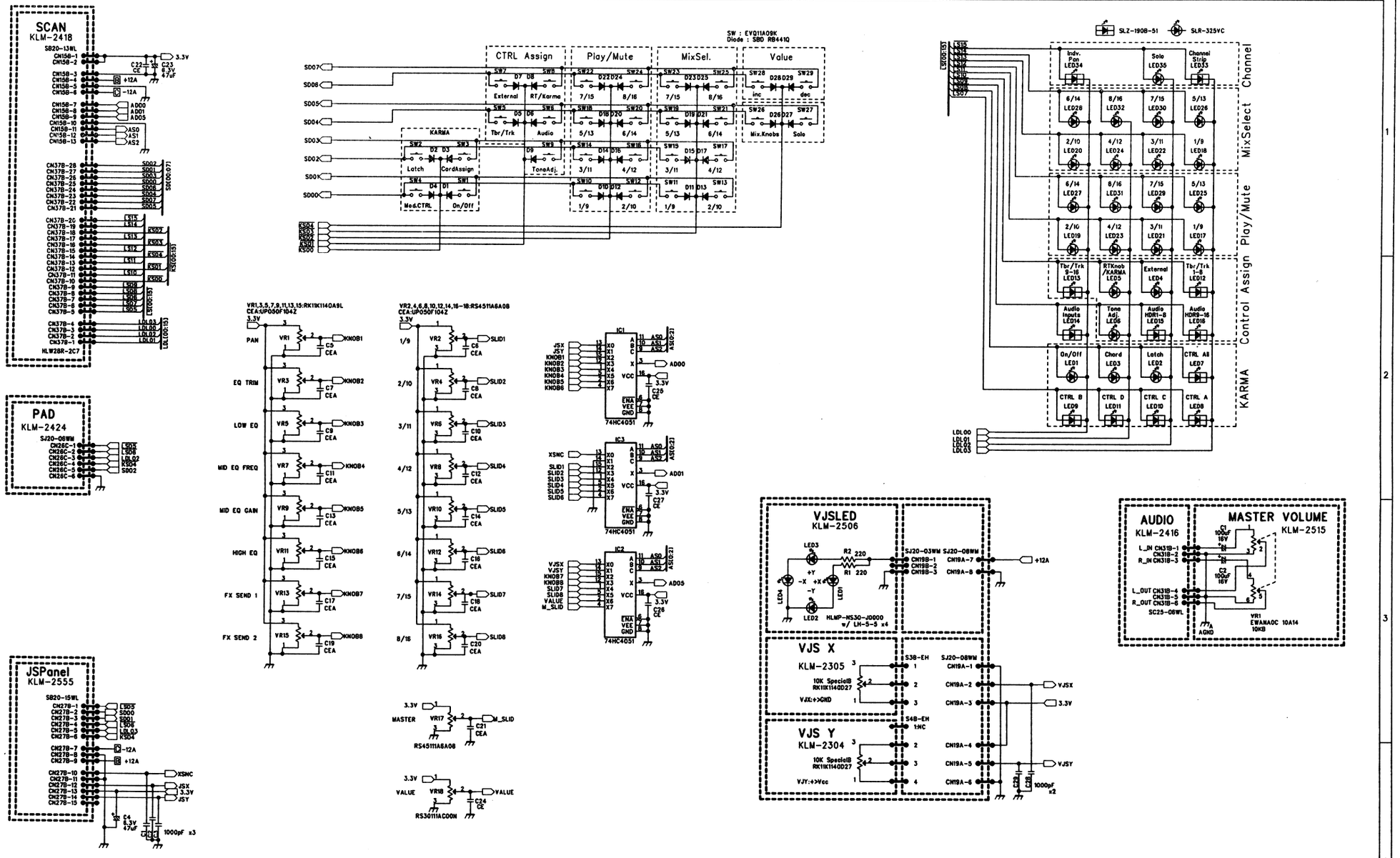

MARK	REVISION REASON	DATE	REVISED BY
△			
△			
△			
△			
△			

DRAWN BY	DESIGNED BY	CHECKED BY	MODEL	X-2100/2180
Y.Nishioka	Y.Nishioka		TITLE	KLM-2419/2506/2515 /2304/2305 PanelL/VJSLED/MasterVol./VJS
KORG	DRAWING NO.	KOD-A30627	DATE	'04.12.23

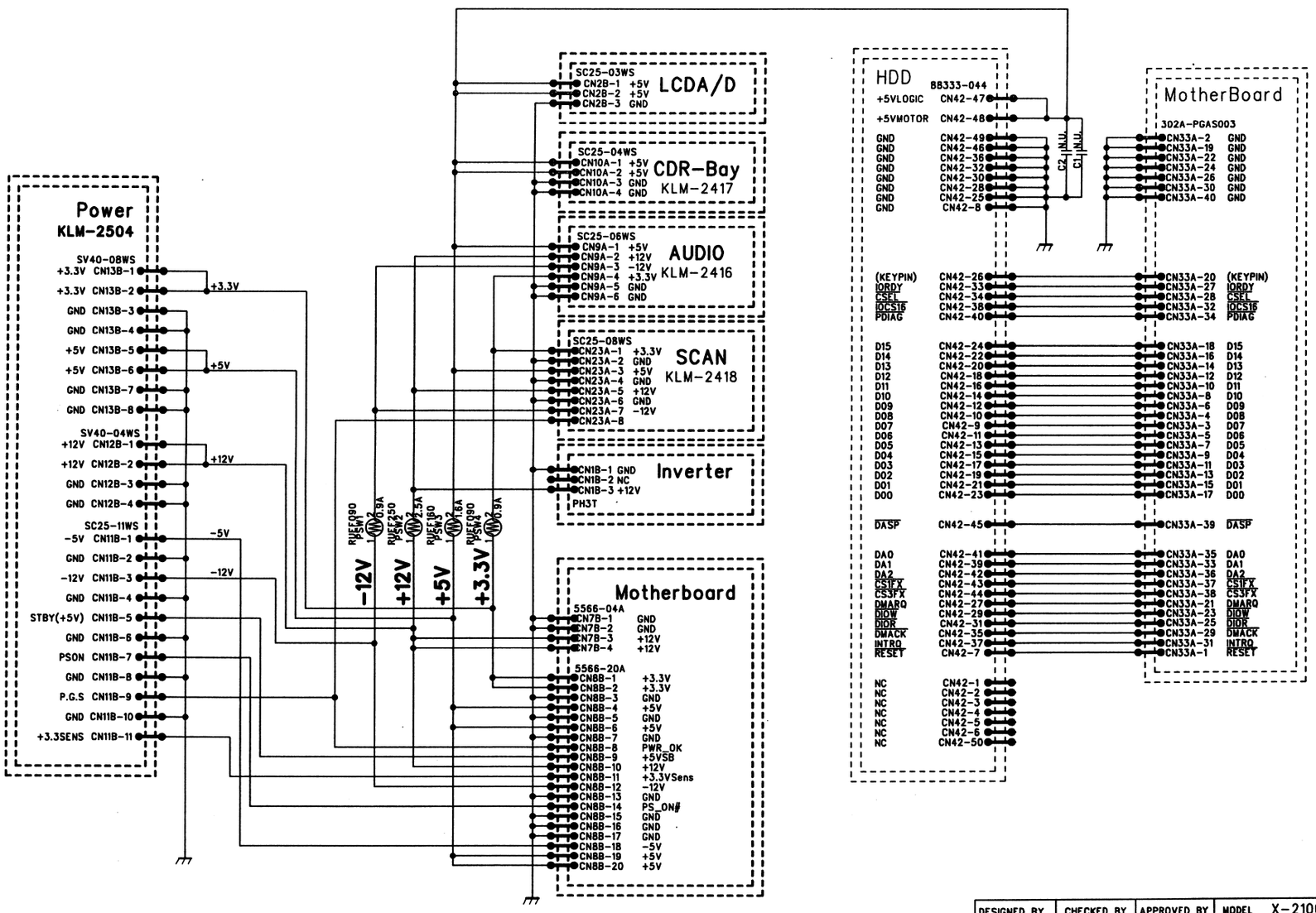

MARK	REVISION REASON	DATE	REVISED BY
△			
△			
△			
△			
△			

DESIGNED BY	CHECKED BY	APPROVED BY	MODEL X-2100/2160
Y.Nishioka **H.Kudou**			TITLE KLM-2423 HDD/PowerDistribution pcb Schematic
KORG	DRAWING NO. KOD-A30630		DATE '04.12.31

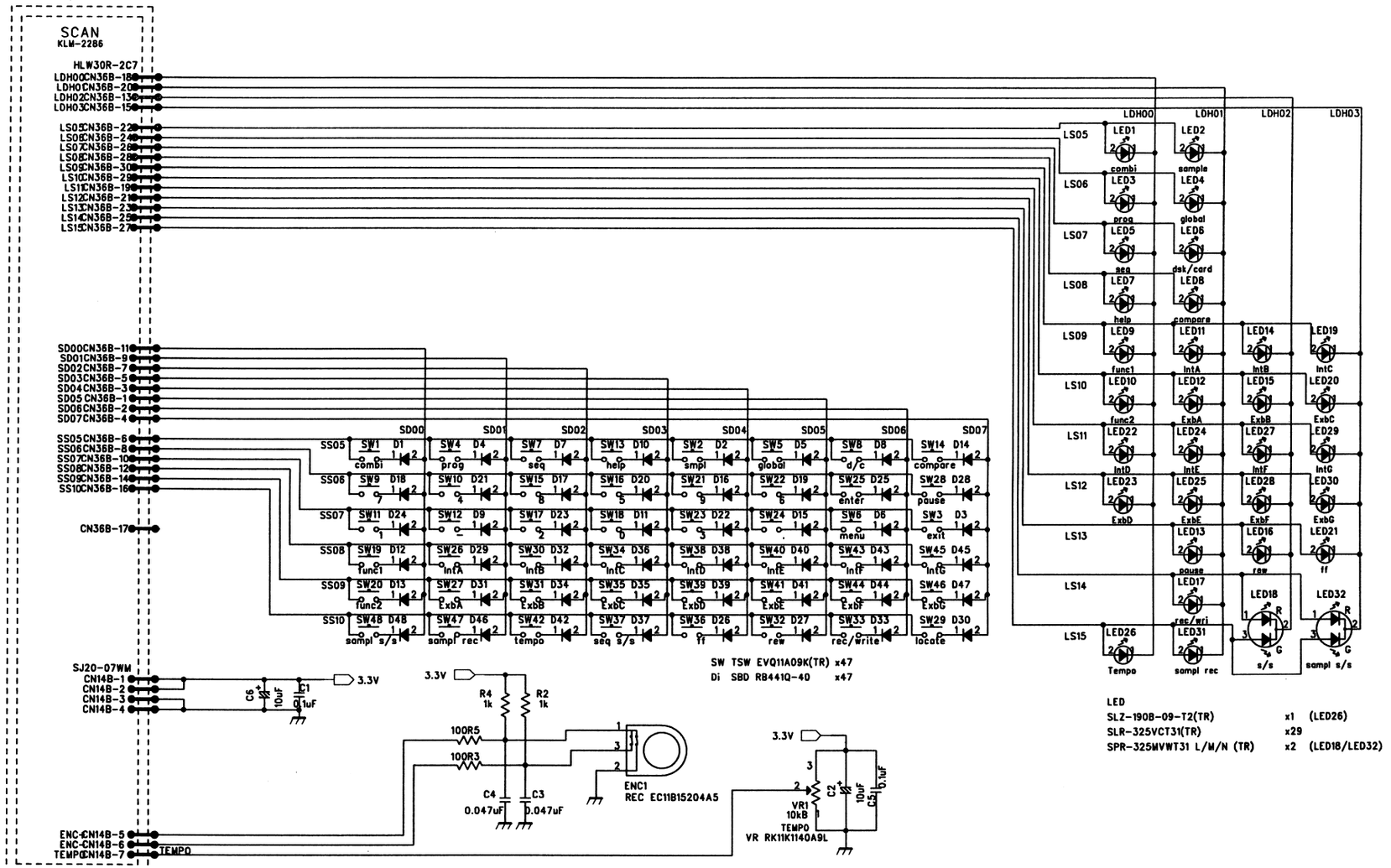

MARK	REVISION REASON	DATE	REVISED BY
△			
△			
△			
△			
△			

DESIGNED BY	CHECKED BY	APPROVED BY	MODEL X-2100
H.Kudou			TITLE KLM-2420(PANEL R) Schematic
KORG	DRAWING NO. KOD-A30628		DATE '04.12.31

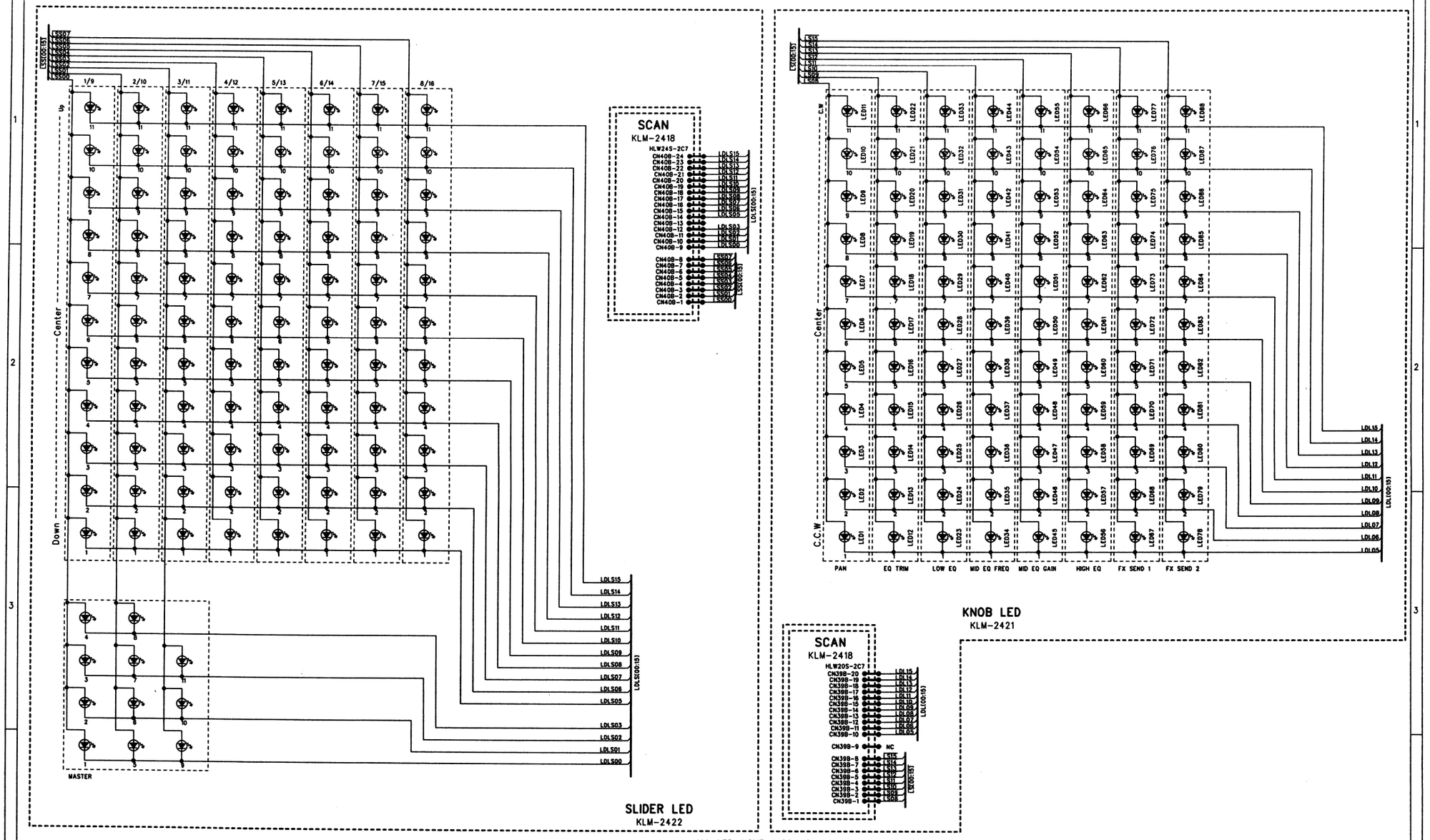

SLIDER LED
KLM-2422

KNOB LED
KLM-2421

ALL LEDs:HSME-A100-M0LJ1

MARK	REVISION REASON	DATE	REVISED BY
△			
△			
△			
△			
△			

DRAWN BY	DESIGNED BY	CHECKED BY	MODEL
Y.Nishioka	Y.Nishioka		X-2100/2160

TITLE
KLM-2421/2422
Knob/Slider LED

KORG

DRAWING NO.
KOD-A3629

DATE
'04.12.23

VGA Connector PCB
KLM-2491

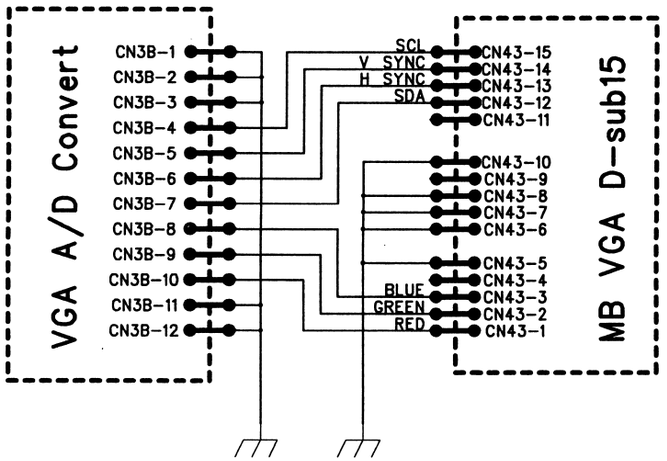

LCD Connector PCB
KLM-2492

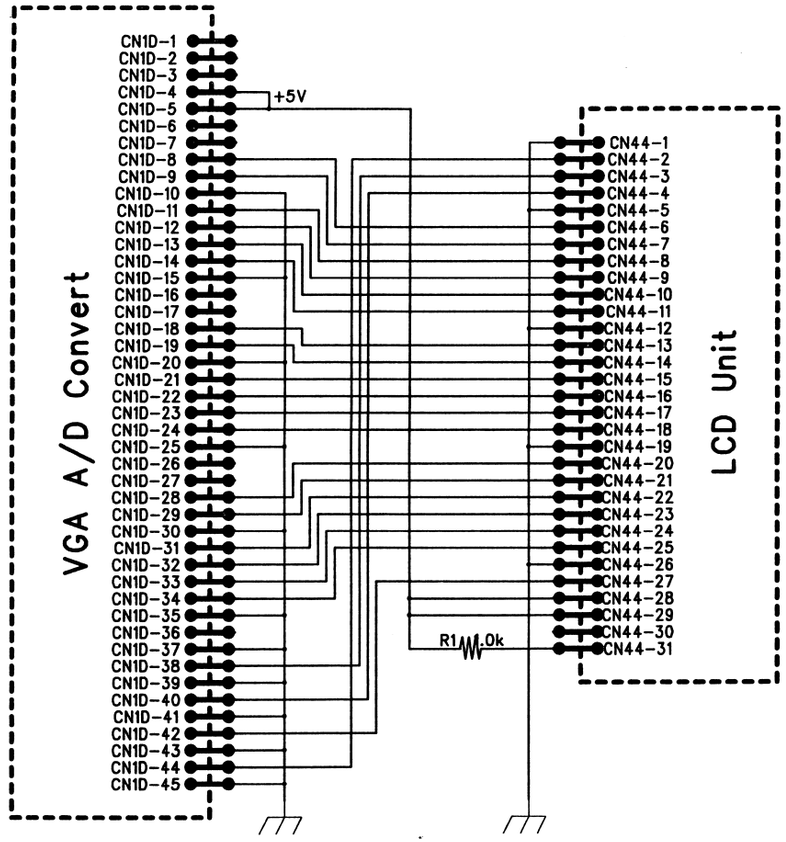

MARK	REVISION REASON	DATE	REVISED BY
△			
△			
△			
△			
△			

DESIGNED BY	CHECKED BY	APPROVED BY	MODEL X2100/2160
H.Kudou			TITLE KLM-2491/2492 VGA/LCD Connector PCB Schematic
KORG	DRAWING NO. KOD-A40586		DATE '04.12.31

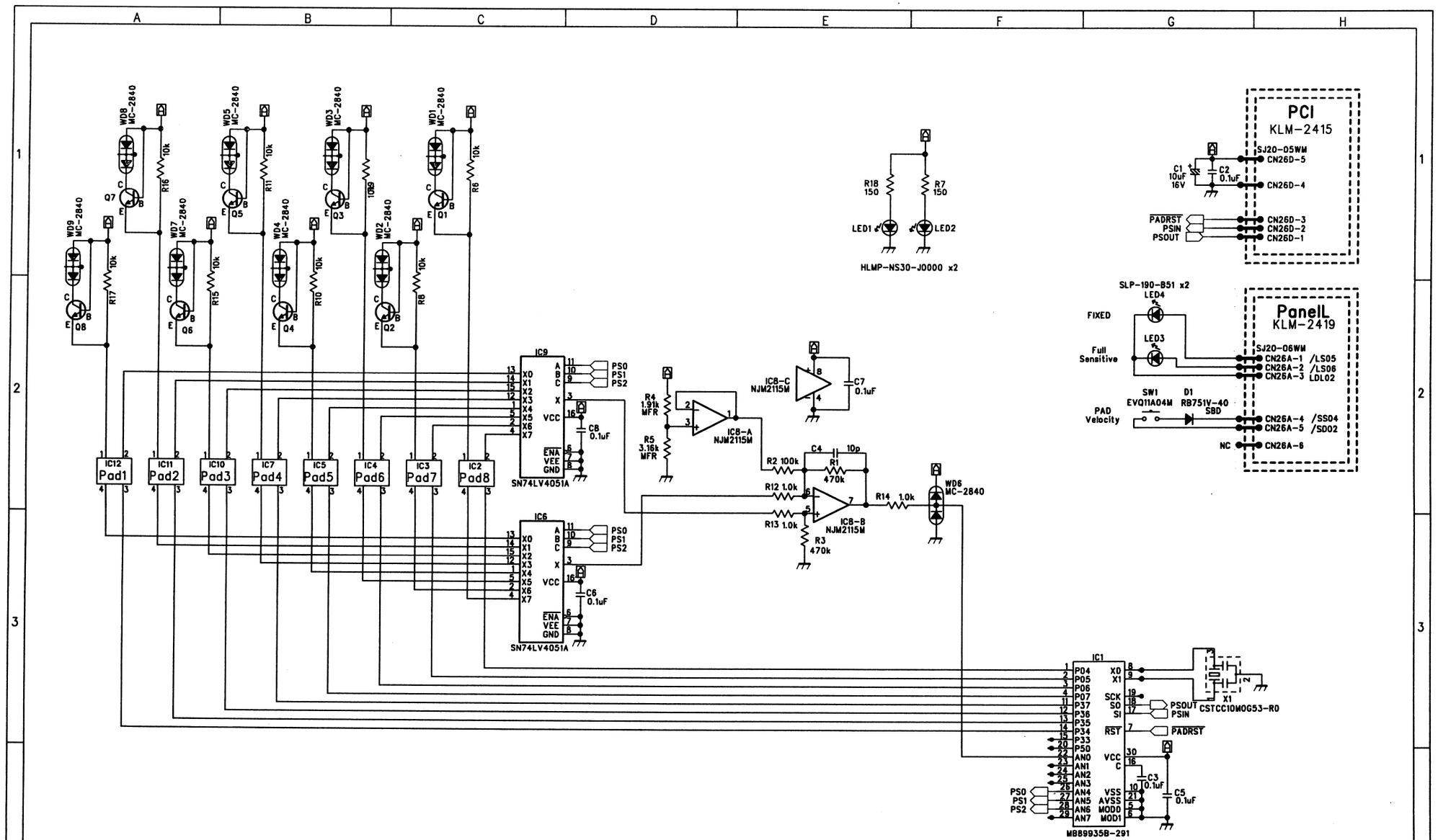

MARK	REVISION REASON	DATE	REVISED BY
△			
△			
△			
△			
△			

DRAWN BY	DESIGNED BY	CHECKED BY	MODEL X2100/2160
Y.Nishioka	H.Kudo Y.Nishioka		TITLE KLM-2424 Pad
KORG	DRAWING NO. KOD-A40585		DATE '04.12.24

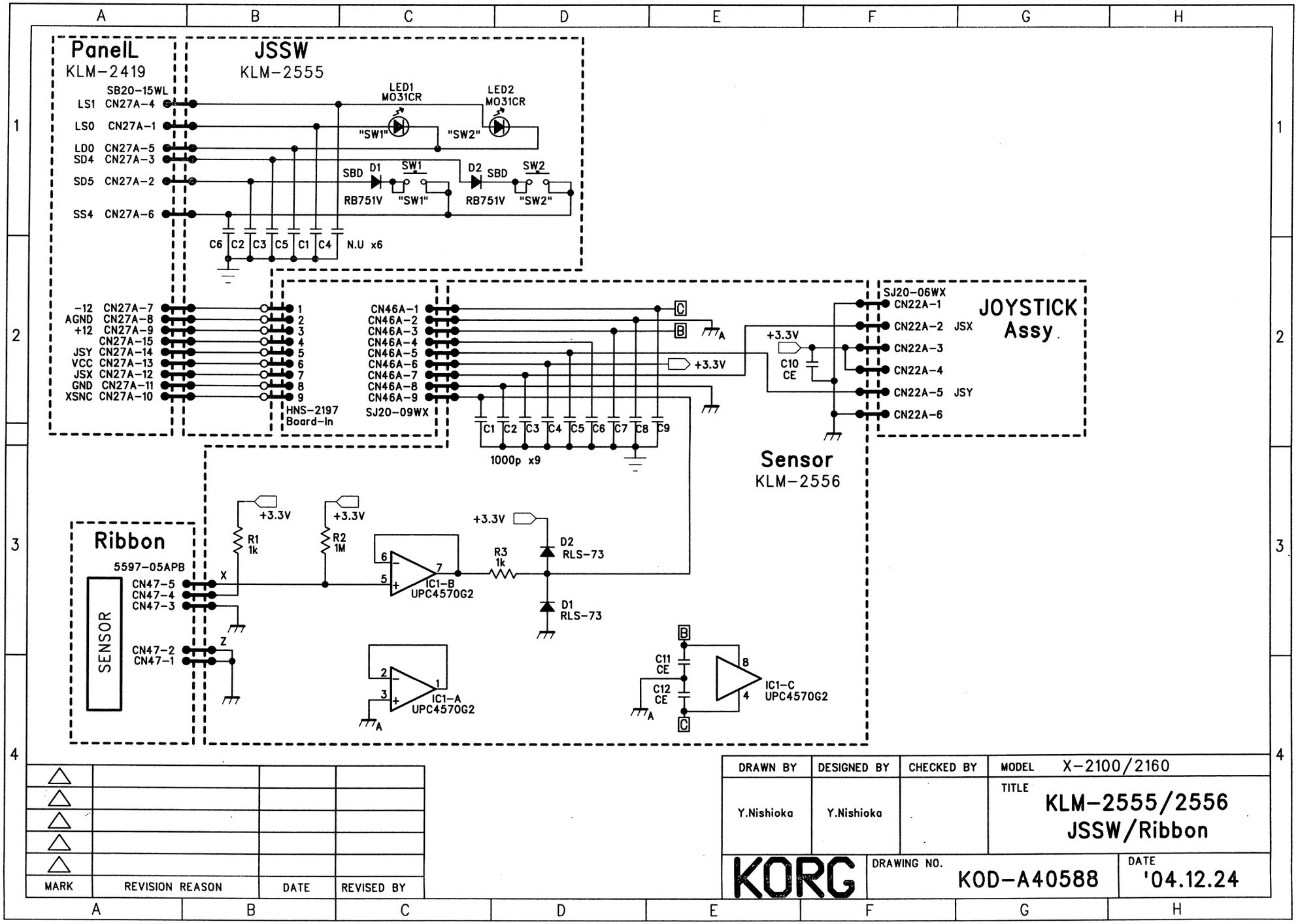

MARK	REVISION REASON	DATE	REVISED BY
△			
△			
△			
△			
△			

DRAWN BY	DESIGNED BY	CHECKED BY	MODEL X-2100/2160
Y.Nishioka	Y.Nishioka		TITLE KLM-2555/2556 JSSW/Ribbon
KORG	DRAWING NO. KOD-A40588		DATE '04.12.24

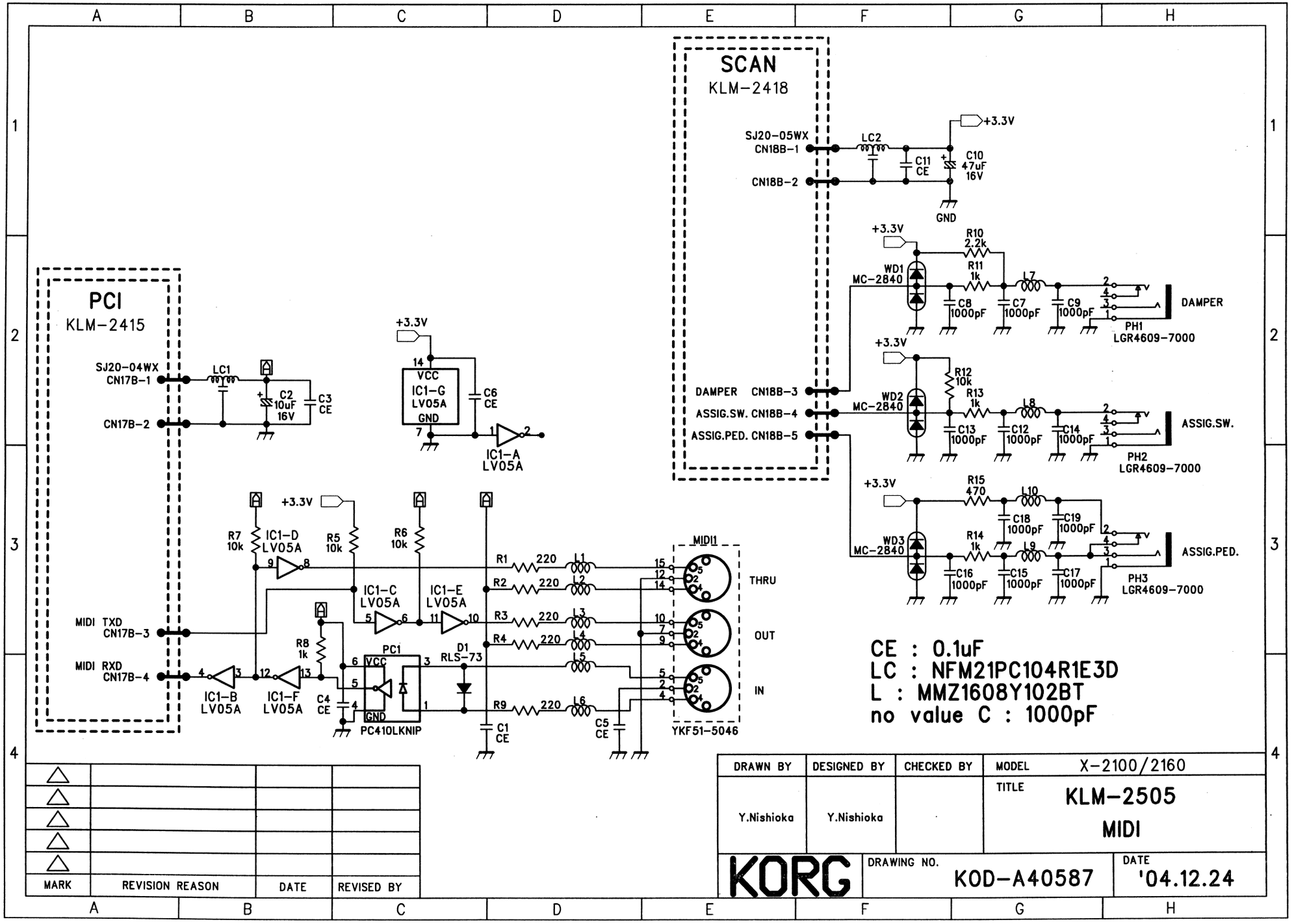

MARK	REVISION REASON	DATE	REVISED BY
△			
△			
△			
△			
△			

DRAWN BY	DESIGNED BY	CHECKED BY	MODEL
Y.Nishioka	Y.Nishioka		X-2100/2160

TITLE: KLM-2505 MIDI

KORG

DRAWING NO.: KOD-A40587

DATE: '04.12.24

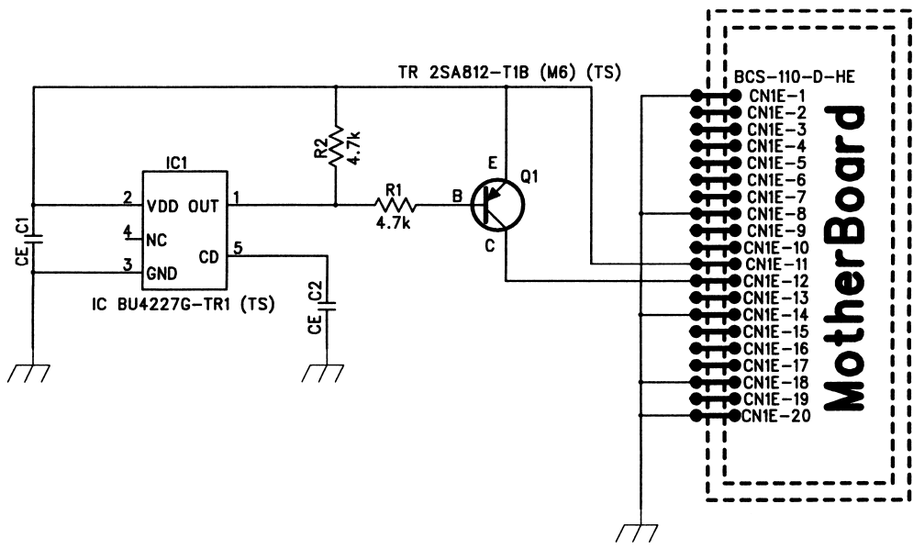

MARK	REVISION REASON	DATE	REVISED BY
△			
△			
△			
△			
△			

DESIGNED BY	CHECKED BY	APPROVED BY	MODEL X2100/2160
H.Kudou			TITLE KLM-2651 Boot Support PCB Schematic
KORG	DRAWING NO. KOD-A40690		DATE '04.12.27

Transmit

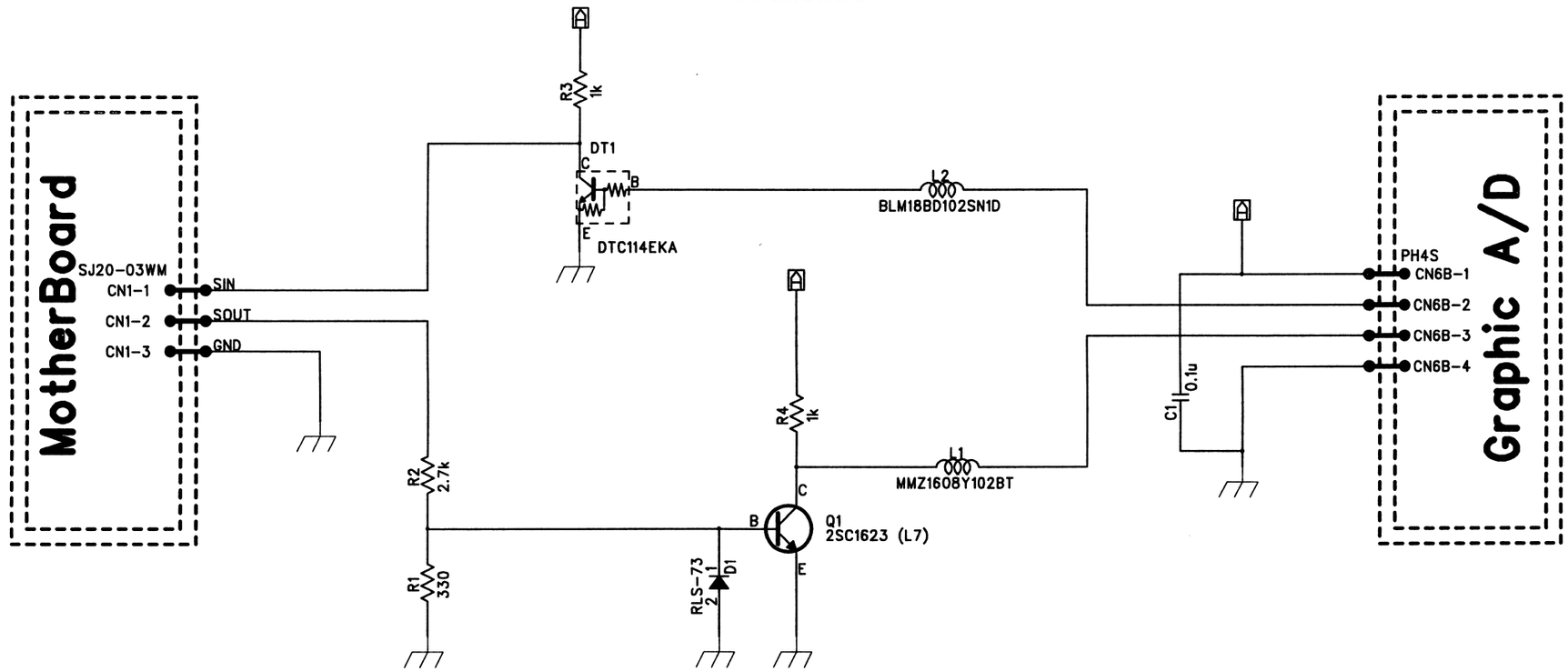

Receive

MARK	REVISION REASON	DATE	REVISED BY
△			
△			
△			
△			
△			

DESIGNED BY	CHECKED BY	APPROVED BY	MODEL X-2100/2160
H.Kudou			TITLE KLM-2563-1 Serial Connector pcb Schematic
KORG	DRAWING NO. KOD-A40689		DATE '04.12.27

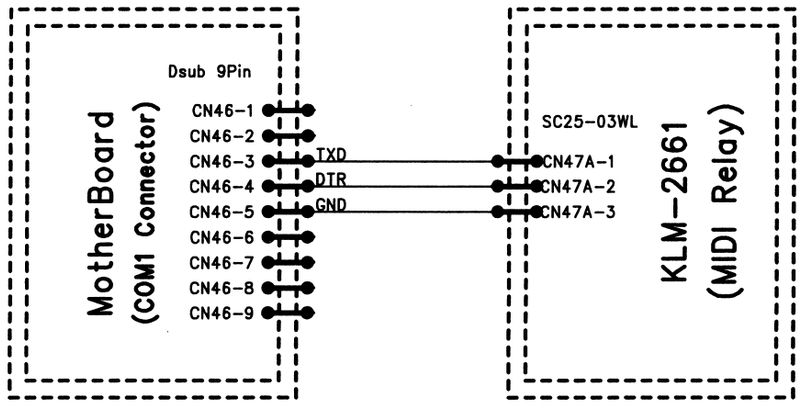

Dsub-9Pinコネクタ

■第1～第3ロット　Chant Sincere　203A-09FGTAAA3
■第4ロット以降　中央無線　CD5309S2100

MARK	REVISION REASON	DATE	REVISED BY
△			
△			
△			
△			
△			

DESIGNED BY	CHECKED BY	APPROVED BY	MODEL X-2100/2160 OASYS76/88
H.Kudou			TITLE KLM-2660 COM1 Connector PCB Schematic
KORG	DRAWING NO. KOD-A40597		DATE '05.03.25

KEYBOARD FS-E76

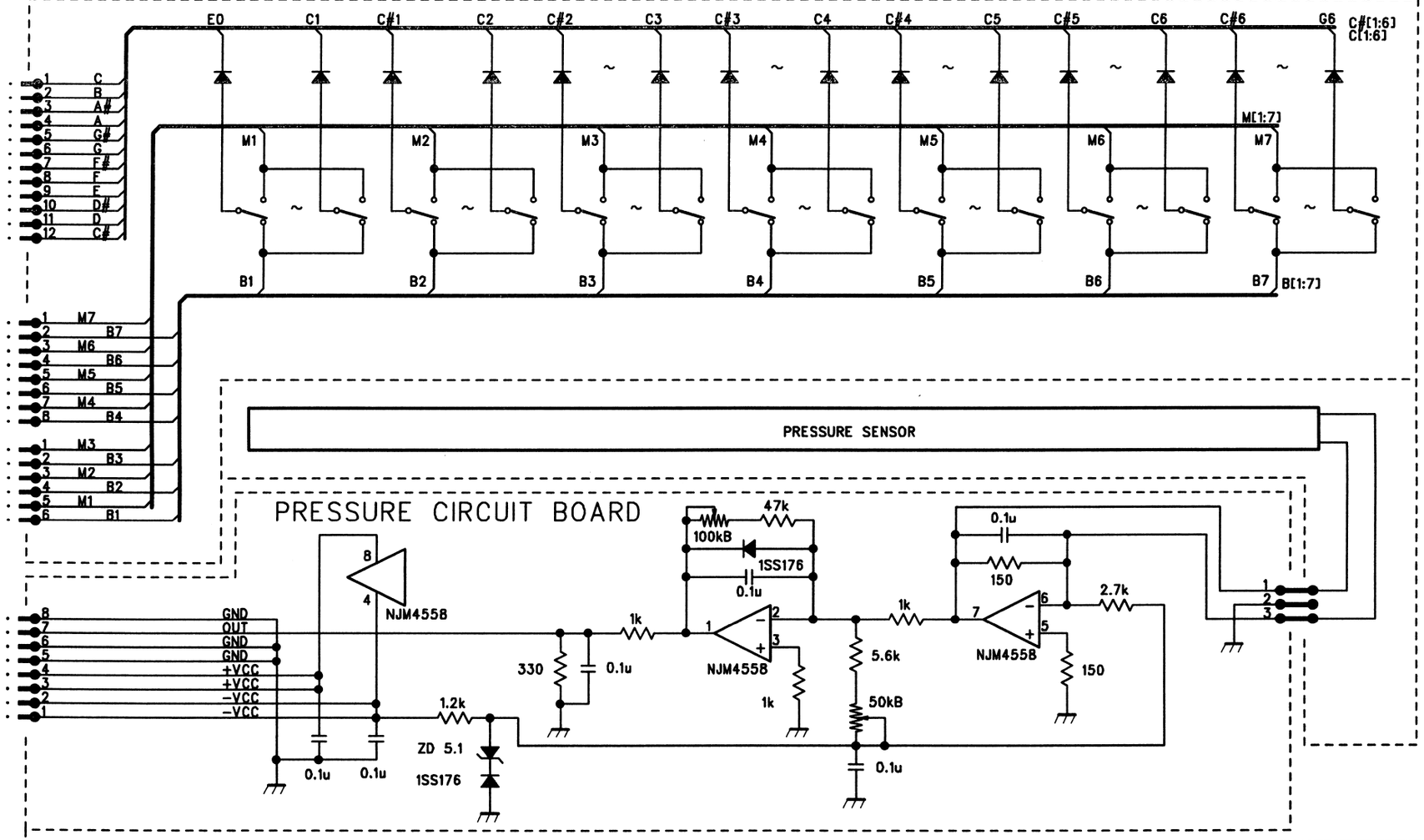

MARK	REVISION REASON	DATE	REVISED BY	APPROVED BY
△				
△				
△				
△				

DRAWN BY	DESIGNED BY	CHECKED BY	CHECKED BY	MODEL COMMON DIAGRAM
Y.Nishioka	YAMAHA			TITLE FS-E76 KEYBOARD/AFTER PCB CIRCUIT DIAGRAM

KORG DRAWING NO. KOD-A40432 DATE '99. 3.15

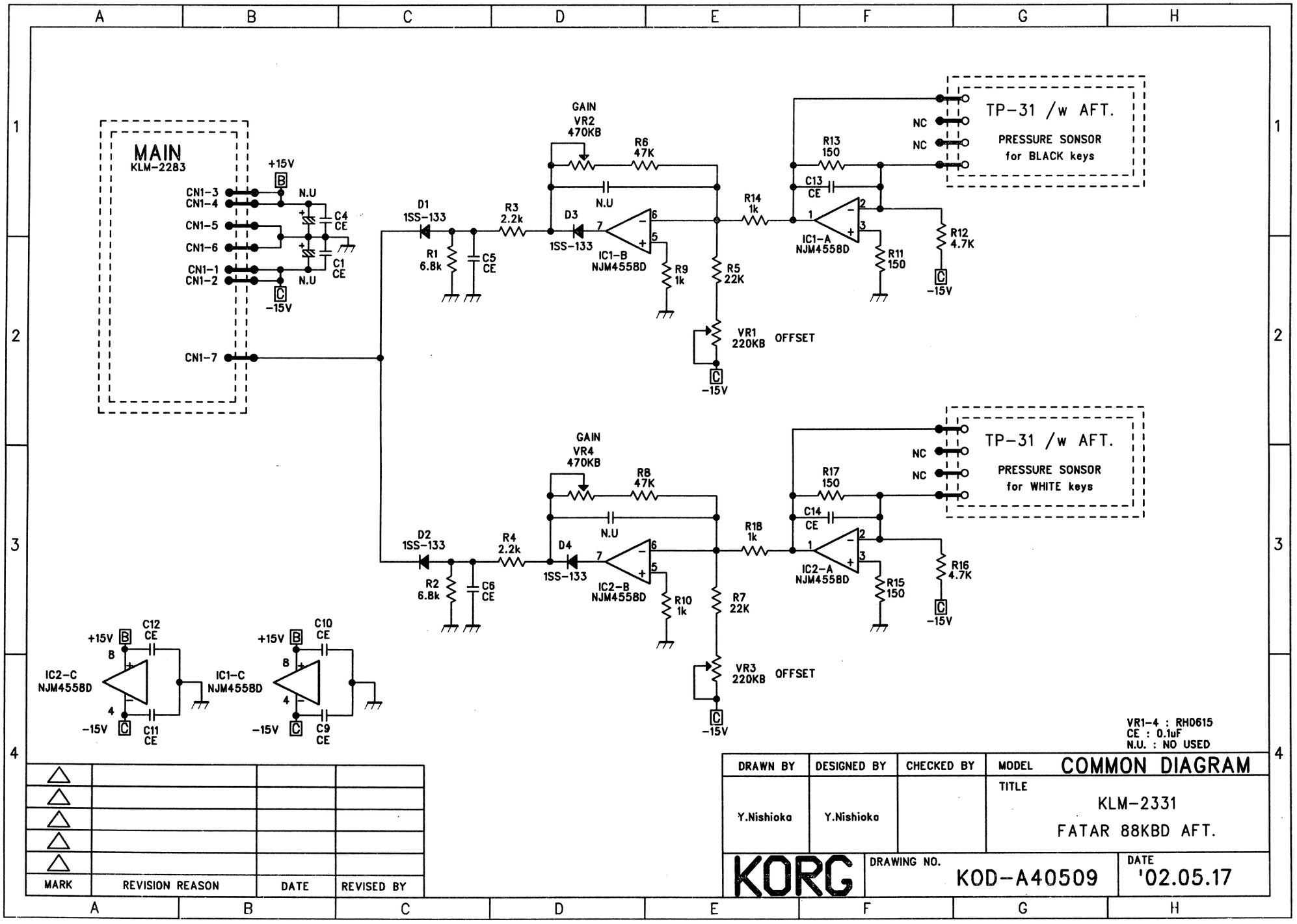

VR1-4 : RH0615
CE : 0.1uF
N.U. : NO USED

MARK	REVISION REASON	DATE	REVISED BY
△			
△			
△			
△			
△			

DRAWN BY	DESIGNED BY	CHECKED BY	MODEL	COMMON DIAGRAM
Y.Nishioka	Y.Nishioka		TITLE	KLM-2331 FATAR 88KBD AFT.
KORG			DRAWING NO.	KOD-A40509
			DATE	'02.05.17

X(PitchBend)
KLM-2305

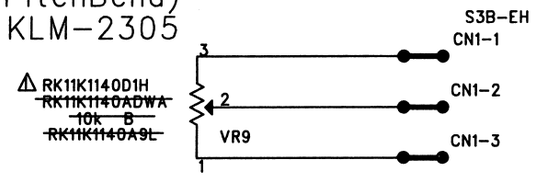

JOYSTICK ----------

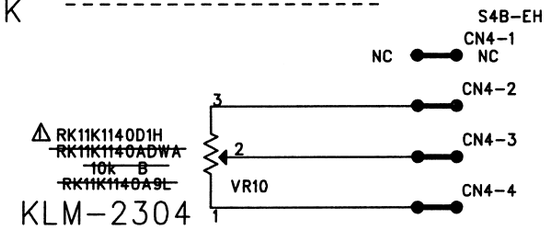

KLM-2304
Y(Modulation)

MARK	REVISION REASON	DATE	REVISED BY
1	To improve the movement	050105	Y.Nishioka

DRAWN BY	DESIGNED BY	CHECKED BY	MODEL COMMON
Y.Nishioka	Y.Nishioka		TITLE KLM-2304/2305 JOYSTICK
KORG	DRAWING NO. KOD-A40501		DATE '01.07.31

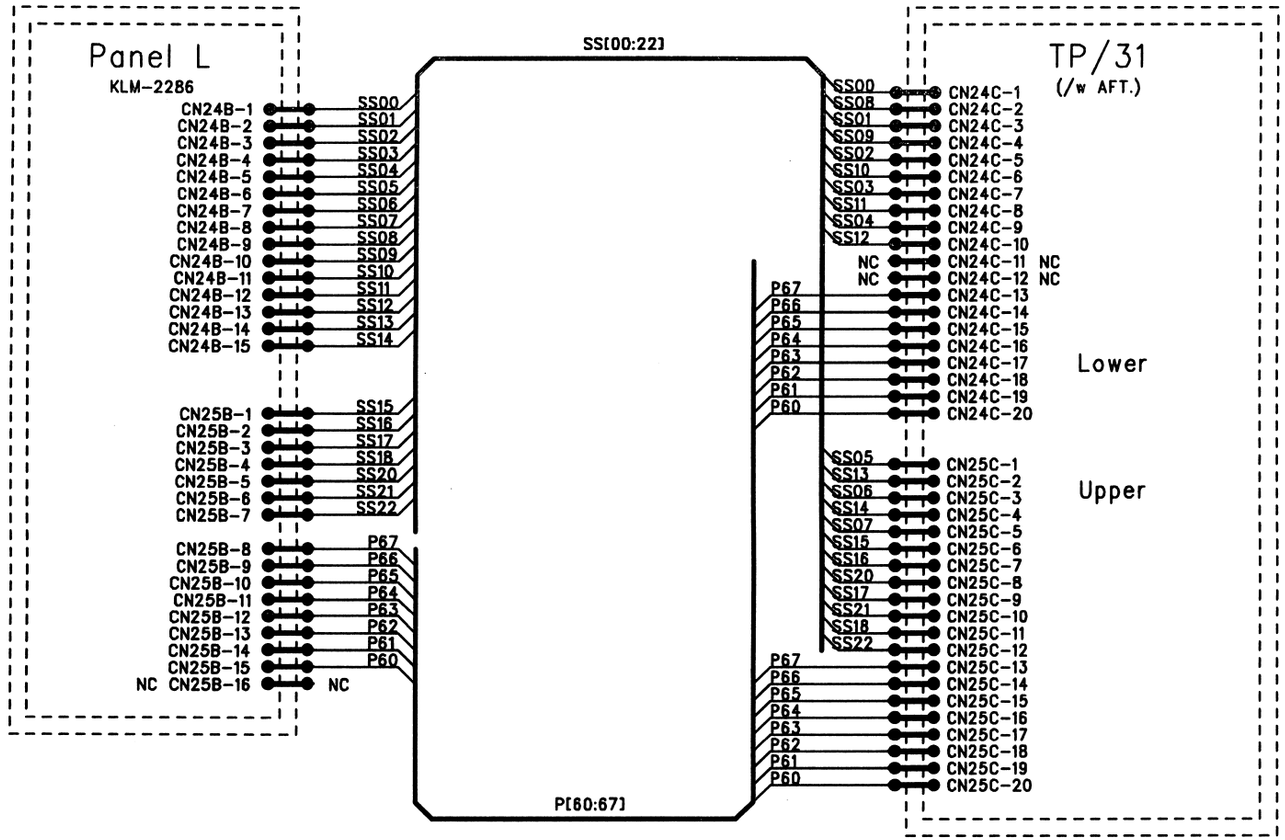

MARK	REVISION REASON	DATE	REVISED BY
△			
△			
△			
△			
△			

DRAWN BY	DESIGNED BY	CHECKED BY	MODEL X-0120
Y.Nishioka	Y.Nishioka		TITLE KLM-2332 KBD Harness Connecting Board
KORG	DRAWING NO. KOD-A40510		DATE '02.02.25

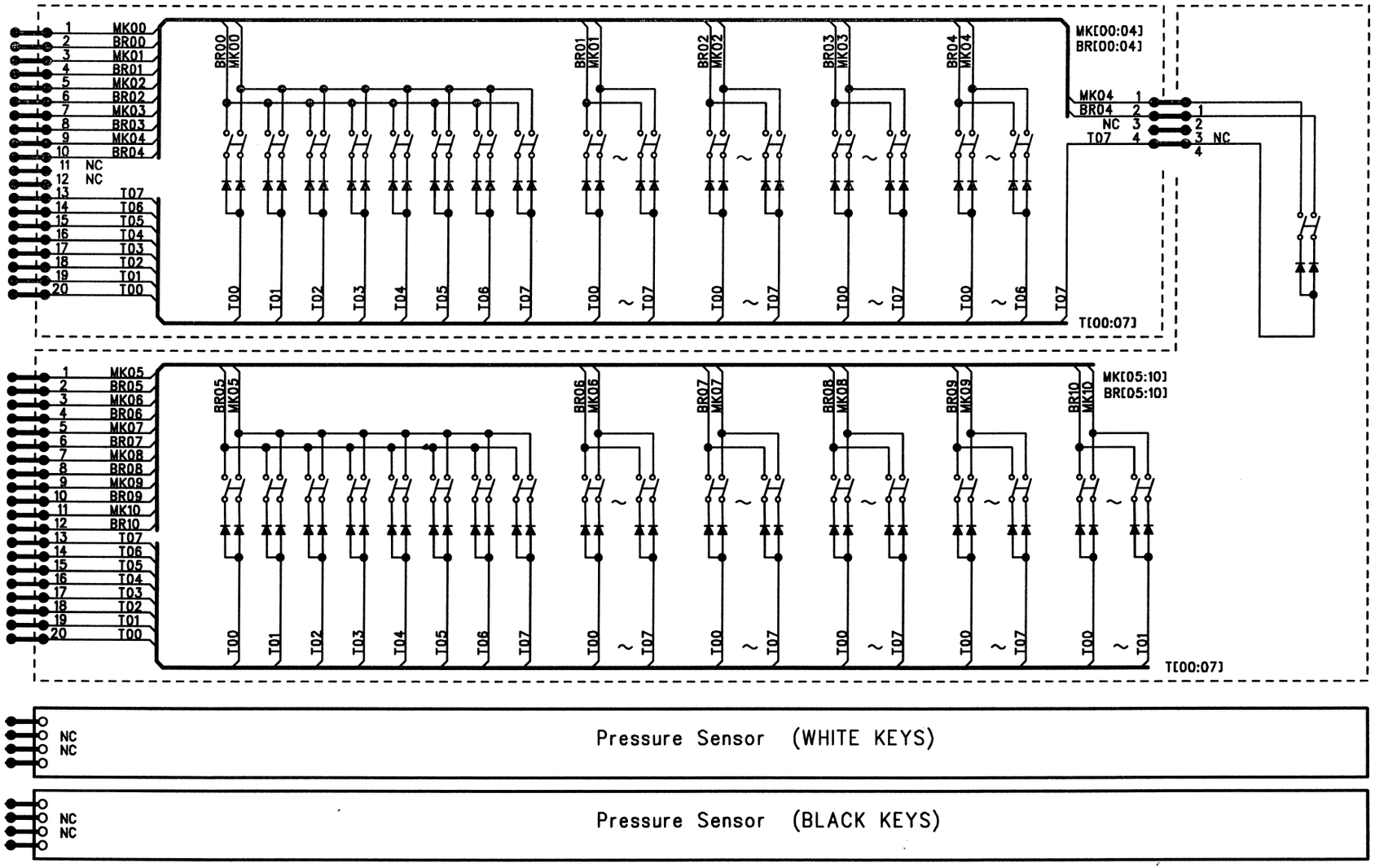

MARK	REVISION REASON	DATE	REVISED BY
△			
△			
△			
△			

DRAWN BY	DESIGNED BY	CHECKED BY	CHECKED BY	MODEL TP/31 /w AFT.
Y.Nishioka	FATAR			TITLE FATAR 88Key KEYBOARD CIRCUIT DIAGRAM

KORG DRAWING NO. KOD-A40512 DATE '02.02.25

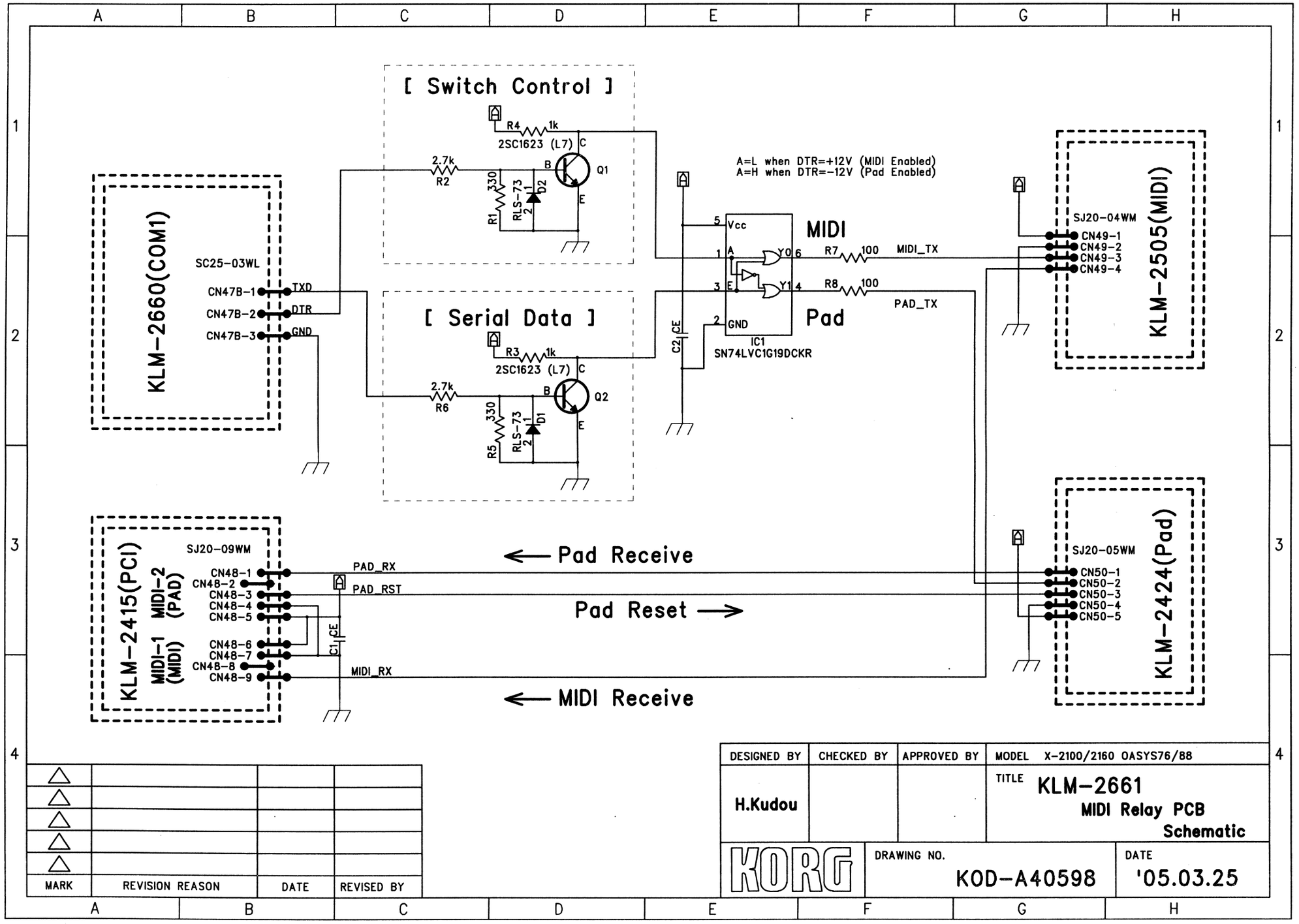

MARK	REVISION REASON	DATE	REVISED BY
△			
△			
△			
△			
△			

DESIGNED BY	CHECKED BY	APPROVED BY	MODEL X-2100/2160 OASYS76/88
H.Kudou			TITLE KLM-2661 MIDI Relay PCB Schematic
KORG	DRAWING NO. KOD-A40598		DATE '05.03.25

How to start test mode

After turning on the power, press the following switches at the same time;

[FUNCTION] + [EXIT] + [5] + [ENTER]

Operation procedure of TEST MODE

[▽]	:	Item Down
[△]	:	Item Up
[<<REW]	:	Step Down
[FF>>]	:	Step Up
[ENTER]	:	Carry on test

Precaution on TEST MODE

Preparation before starting TEST MODE

Connect MIDI IN and MIDI OUT with MIDI cable.
(as loop connection)
Connect USB memory into each USB port.

If [Connect a S/P DIF cable] is shown when you do internal check, please connect S/P DIF IN and S/P DIF OUT with optical cable (as a loop connection).

When you begin checking RIBBON, JOYSTICK, VECTOR JOYSTICK, PEDAL, PAD and AFTER TOUCH(76Key), calibration values are initialized.
So please check for getting calibration.

PART CODE	PART NAME	NOTE	Q'TY
200034552331	PCB ASSY KLM-2331/2 ST88	KLM-2331/32 TRITON ST/EXT88	1
200046362415	PCB ASSY KLM-2415 OASYS	KLM-2415 OASYS	1
200046362416	PCB ASSY KLM-2416 OASYS	KLM-2416 OASYS	1
200046362417	PCB ASSY KLM-2417-91/2505-63	KLM-2417-91/2505-63 OASYS	1
200046362419	PCB ASSY KLM-2419/2506/2515	KLM-2419/2506/2515 OASYS	1
200046362420	PCB ASSY KLM-2420 OASYS	KLM-2420 OASYS	1
200046362421	PCB ASSY KLM-2421/22/92/2651	KLM-2421/22/92/2651 OASYS	1
200046362660	PCB ASSY KLM-2660/2661 OASYS	KLM-2660/2661 OASYS	1
500002186300	LCD INVERTER MSA2022	OASYS 88 M.PART	1
500002186400	LCD ADC BOARD MSA2023	OASYS 88 M.PART	1
500002186600	MOTHER BOARD MX4GVR (AOPEN)	OASYS 88 M.PART	1
500002186700	POWER SUPPLY UNIT PSU-AD130	OASYS 88 M.PART	1
500002187000	DIMM SMD-1G48H-D (PC3200 CL3)	OASYS 88 M.PART	1
500184080390	FUSE R RF73B2ETD 390ｵｰﾑ (TS)	KLM-2416 OASYS	2
500304000110	TR 2SA812-T1B (M6) (TS)	KLM-2416 OASYS	1
500304000110	TR 2SA812-T1B (M6) (TS)	KLM-2421/22/92/2651 OASYS	1
500304020150	TR 2SC1623-T1B (L7) (TS)	KLM-2417-91/2505-63 OASYS	9
500304020150	TR 2SC1623-T1B (L7) (TS)	KLM-2660/2661 OASYS	2
500304020230	TR 2SC3661-TA/TB(3K) (TS)	KLM-2416 OASYS	22
500304050140	TR DTC114EKA T146 (TS)	KLM-2416 OASYS	2
500304050140	TR DTC114EKA T146 (TS)	KLM-2417-91/2505-63 OASYS	24
500304050450	TR DTA143TKA (TS)	KLM-2417-91/2505-63 OASYS	2
500304050470	TR 2SB1132T100Q (TS)	KLM-2417-91/2505-63 OASYS	16
500312013600	LED MOB31CR	KLM-2417-91/2505-63 OASYS	2
500312051600	LED SLP-190B-51	KLM-2417-91/2505-63 OASYS	2
500312053500	LED HLMP-NS30-J0000	KLM-2417-91/2505-63 OASYS	2
500312053500	LED HLMP-NS30-J0000	KLM-2419/2506/2515 OASYS	4
500313006200	TOUCH PANEL LCD MSA2021	OASYS 88 M.PART	1
500314001300	DIODE 1SS-133 T-77 (TA)	KLM-2331/32 TRITON ST/EXT88	4
500314001400	DIODE RLS-73 TE-11 (TS)	KLM-2417-91/2505-63 OASYS	5
500314001400	DIODE RLS-73 TE-11 (TS)	KLM-2660/2661 OASYS	2
500314010430	LED HSME-A100-MOLJ1 (TS)	KLM-2421/22/92/2651 OASYS	187
500314028800	LED SLZ-190B-09-T2 (TR)	KLM-2419/2506/2515 OASYS	12
500314028800	LED SLZ-190B-09-T2 (TR)	KLM-2420 OASYS	1
500314030800	LED SLR-325VCT31(TR)	KLM-2419/2506/2515 OASYS	23
500314030800	LED SLR-325VCT31(TR)	KLM-2420 OASYS	29
500314032000	LED SPR-325MVWT31 L/M/N (TR)	KLM-2420 OASYS	2
500314032500	DIODE RB751V-40TE17 (TS)	KLM-2417-91/2505-63 OASYS	3
500314032700	DIODE RB160L-60TE25 (TS)	KLM-2416 OASYS	1
500314033000	DIODE RB521S-30TE61 (TS)	KLM-2417-91/2505-63 OASYS	3
500314034700	DIODE RB441Q-40T-77 (TR)	KLM-2419/2506/2515 OASYS	29
500314034700	DIODE RB441Q-40T-77 (TR)	KLM-2420 OASYS	47
500314034800	LED SML-A12UTT86 (TS)	KLM-2416 OASYS	2
500315000500	DOUBLE DIODE MC-2840-T12-1(TS)	KLM-2417-91/2505-63 OASYS	12
500315001200	DOUBLE DIODE DAN217T146(TS)	KLM-2416 OASYS	11
500320004327	IC HD74HC4051P	KLM-2419/2506/2515 OASYS	3
500320004705	IC HD64F2215TE16V(X2100/60):S	KLM-2417-91/2505-63 OASYS	1
500320009001	IC NJM-4558D-V	KLM-2331/32 TRITON ST/EXT88	2
500320009108	IC NJM4556AL (SIP)	KLM-2416 OASYS	1
500320012335	IC MB89935BPFV-G-291-BNDE1:S	KLM-2417-91/2505-63 OASYS	1
500320021156	IC TMS57070FPJ (S)	KLM-2415 OASYS	1
500320051001	IC RK80532PE072512 SL6PF2.8G	OASYS 88 M.PART	1
500320052001	IC VT1712 (S)	KLM-2415 OASYS	1
500324001015	IC UPC4570G2-E2 (TS)	KLM-2417-91/2505-63 OASYS	1
500324003001	IC TC7S32F-TE85L (TS)	KLM-2417-91/2505-63 OASYS	1

PART CODE	PART NAME	NOTE	Q'TY
500324004057	IC HD74HC153FPEL (TS)	KLM-2415 OASYS	1
500324007026	IC BU2098F-E2 (TS)	KLM-2415 OASYS	1
500324007028	IC BU4227G-TR1 (TS)	KLM-2421/22/92/2651 OASYS	1
500324009019	IC NJM2115M-TE1 (TS)	KLM-2417-91/2505-63 OASYS	1
500324009054	IC NJM78M05DL1A-TE1(TS)	KLM-2416 OASYS	2
500324009063	IC NJM2374AM-TE1 (TS)	KLM-2416 OASYS	1
500324011017	IC M5218AFP-600C (TS)	KLM-2417-91/2505-63 OASYS	1
500324018011	IC AK4353VF-E2 (TS)	KLM-2416 OASYS	1
500324018012	IC AK4112BVF-E2 (TS)	KLM-2416 OASYS	1
500324021003	IC TLC2932IPWR (TS)	KLM-2415 OASYS	1
500324021003	IC TLC2932IPWR (TS)	KLM-2416 OASYS	1
500324021032	IC SN74LV4051ANSR (TS)	KLM-2417-91/2505-63 OASYS	2
500324021104	IC SN74LV74APWR (TS)	KLM-2415 OASYS	2
500324021105	IC SN74LV245APWR (TS)	KLM-2415 OASYS	3
500324021105	IC SN74LV245APWR (TS)	KLM-2416 OASYS	3
500324021105	IC SN74LV245APWR (TS)	KLM-2417-91/2505-63 OASYS	2
500324021107	IC SN74LV125APWR (TS)	KLM-2417-91/2505-63 OASYS	1
500324021108	IC SN74LV138APWR (TS)	KLM-2417-91/2505-63 OASYS	3
500324021111	IC SN74LV157APWR (TS)	KLM-2415 OASYS	1
500324021113	IC SN74LV4040APWR (TS)	KLM-2415 OASYS	2
500324021113	IC SN74LV4040APWR (TS)	KLM-2416 OASYS	1
500324021114	IC SN74LV05APWR (TS)	KLM-2417-91/2505-63 OASYS	1
500324021119	IC SN74LV4051APWR (TS)	KLM-2417-91/2505-63 OASYS	1
500324021138	IC SN74LV126APWR (TS)	KLM-2417-91/2505-63 OASYS	1
500324021149	IC NE5532ADR (TS)	KLM-2416 OASYS	14
500324021150	IC SN74AHC1G86DCKR (TS)	KLM-2415 OASYS	1
500324021151	IC SN74AHCT1G04DCKR (TS)	KLM-2415 OASYS	2
500324021151	IC SN74AHCT1G04DCKR (TS)	KLM-2416 OASYS	1
500324021153	IC SN74AHCT245PWR (TS)	KLM-2415 OASYS	2
500324021153	IC SN74AHCT245PWR (TS)	KLM-2416 OASYS	1
500324021154	IC SN74HCT574PWR (TS)	KLM-2417-91/2505-63 OASYS	3
500324021155	IC SN74LV273APWR (TS)	KLM-2417-91/2505-63 OASYS	2
500324021156	IC SN74LV4052APWR (TS)	KLM-2417-91/2505-63 OASYS	1
500324021157	IC SN74LVC139APWR (TS)	KLM-2417-91/2505-63 OASYS	2
500324021158	IC SN74LVC32APWR (TS)	KLM-2417-91/2505-63 OASYS	1
500324021161	IC SN74ACT574PWR (TS)	KLM-2417-91/2505-63 OASYS	2
500324021190	IC SN74LVC1G19DCKR (TS)	KLM-2660/2661 OASYS	1
500324021260	IC SN74AHC1G08DCKR (TS)	KLM-2415 OASYS	1
500324035003	IC AT88SC0204C-S1(TS)	KLM-2415 OASYS	1
500324036013	IC PCM1793DBR (TS)	KLM-2416 OASYS	5
500324036015	IC PCM1802DBR (TS)	KLM-2416 OASYS	2
500324052001	IC HG-106C-FT (TS)	KLM-2417-91/2505-63 OASYS	8
500330003400	OPTICAL MODULE TOTX142L	KLM-2416 OASYS	1
500330003500	OPTICAL MODULE TORX142L	KLM-2416 OASYS	1
500334001900	PHOTO COUPLER PC410LKNIP (TS)	KLM-2417-91/2505-63 OASYS	1
500335011200	X'TAL CA-301 24.576MHZ	KLM-2415 OASYS	1
500335011300	X'TAL CA-301 16.0MHZ	KLM-2417-91/2505-63 OASYS	1
500335011500	X'TAL CA-301 22.5792MHZ	KLM-2415 OASYS	1
500335012400	X'TAL CA-301 8MHZ	KLM-2416 OASYS	1
500335400138	CERAMIC OSC CSTCC10M0G53-R0	KLM-2417-91/2505-63 OASYS	1
500350002422	SFR RH0615CJ5J 220K	KLM-2331/32 TRITON ST/EXT88	2
500350002447	SFR RH0615CS5J 470K	KLM-2331/32 TRITON ST/EXT88	2
500362009007	VR RK11K1140A9L	KLM-2419/2506/2515 OASYS	8
500362009007	VR RK11K1140A9L	KLM-2420 OASYS	1
500362009052	VR RK11K1140D1H	KLM-2304/2305	2

PART CODE	PART NAME	NOTE	Q'TY
500362009056	VR RK11K1140D27 10KB SPECIAL	KLM-2304/2305 OASYS	2
500362009058	VR RK09K1110 50KSP (F1815071M)	KLM-2416 OASYS	2
500365007800	SVR RS30111AC00N	KLM-2419/2506/2515 OASYS	1
500365009500	SVR EWA NA0C10B14 10KB	KLM-2419/2506/2515 OASYS	1
500365010900	SVR RS45111A6A08	KLM-2419/2506/2515 OASYS	9
500370005000	REC EC11B15204A5	KLM-2420 OASYS	1
500373010300	SLIDE SW SK-12E12G6	KLM-2416 OASYS	2
500373010700	SSW SSSS910400	KLM-2417-91/2505-63 OASYS	1
500374000600	TSW EVQ11A09K (TR)	KLM-2419/2506/2515 OASYS	29
500374000600	TSW EVQ11A09K (TR)	KLM-2420 OASYS	47
500374001000	TSW EVQ11A04M (TR)	KLM-2417-91/2505-63 OASYS	1
500375010900	TOUCH SW EVQPAC07K	KLM-2417-91/2505-63 OASYS	2
500375014900	PUSH SW SPUN192600	KLM-2416 OASYS	2
500375016200	PSW JW-L22RKK	OASYS 88 M.PART	1
500402008300	COIL TC131M-1A-6052	KLM-2416 OASYS	1
500402400600	COIL PK0810-331K-UL-T/F(TR)	KLM-2416 OASYS	4
500404000560	INDUCTOR LEM3225T470K (TS)	KLM-2416 OASYS	2
500404001150	BEAD MMZ1608Y102BT-KORG:TS	KLM-2416 OASYS	20
500404001150	BEAD MMZ1608Y102BT-KORG:TS	KLM-2417-91/2505-63 OASYS	16
500404001170	BEAD MMZ1608R102AT (TS)	KLM-2416 OASYS	8
500415004900	BUZZER PKM17EPP-2002-B0	KLM-2417-91/2505-63 OASYS	1
500415005000	KX-2100 SENSER (BLACK)	OASYS 88 M.PART	1
500420007002	88NOTE TP/41+PCB+AFTH	OASYS 88 M.PART	1
500430008484	X-2100/60 CD ROM OACD-R01	OASYS 88 M.PART	1
500430008485	X-2100/60 CD ROM OACD-R02	OASYS 88 M.PART	1
500430008486	X-2100/60 CD ROM OACD-R03	OASYS 88 M.PART	1
500430008487	X-2100/60 CD ROM OACD-R04	OASYS 88 M.PART	1
500435004900	HDD MHT2040AT CA06297-B304 40G	OASYS 88 M.PART	1
500435005000	COMBO DRIVE UJDA760KR-A	OASYS 88 M.PART	1
500437000500	DC FAN 109P1212-H402	OASYS 88 M.PART	1
500450003100	PHONE JACK LGR4609-7000	KLM-2416 OASYS	12
500450003100	PHONE JACK LGR4609-7000	KLM-2417-91/2505-63 OASYS	4
500471070301	CONNECTOR TOP B3B-PH-K-S (U)	KLM-2417-91/2505-63 OASYS	1
500471071201	CONNECTOR TOP B12B-PH-K-S (U)	KLM-2416 OASYS	1
500471071501	CONNECTOR TOP B15B-PH-K-S (U)	KLM-2331/32 TRITON ST/EXT88	1
500471071501	CONNECTOR TOP B15B-PH-K-S (U)	KLM-2417-91/2505-63 OASYS	1
500471071601	CONNECTOR TOP B16B-PH-K-S (U)	KLM-2331/32 TRITON ST/EXT88	1
500471071601	CONNECTOR TOP B16B-PH-K-S (U)	KLM-2417-91/2505-63 OASYS	1
500471101030	CONNECTOR TOP SC25-03WS	KLM-2416 OASYS	1
500471101030	CONNECTOR TOP SC25-03WS	KLM-2417-91/2505-63 OASYS	2
500471101040	CONNECTOR TOP SC25-04WS	KLM-2417-91/2505-63 OASYS	2
500471101060	CONNECTOR TOP SC25-06WS	KLM-2416 OASYS	2
500471101060	CONNECTOR TOP SC25-06WS	KLM-2417-91/2505-63 OASYS	1
500471101080	CONNECTOR TOP SC25-08WS	KLM-2417-91/2505-63 OASYS	2
500471101110	CONNECTOR TOP SC25-11WS	KLM-2417-91/2505-63 OASYS	1
500471102040	CONNECTOR TOP SJ20-04WX	KLM-2415 OASYS	1
500471102040	CONNECTOR TOP SJ20-04WX	KLM-2417-91/2505-63 OASYS	1
500471102050	CONNECTOR TOP SJ20-05WX	KLM-2415 OASYS	1
500471102050	CONNECTOR TOP SJ20-05WX	KLM-2417-91/2505-63 OASYS	3
500471102060	CONNECTOR TOP SJ20-06WX	KLM-2417-91/2505-63 OASYS	1
500471102070	CONNECTOR TOP SJ20-07WX	KLM-2417-91/2505-63 OASYS	1
500471102080	CONNECTOR TOP SJ20-08WX	KLM-2417-91/2505-63 OASYS	1
500471102090	CONNECTOR TOP SJ20-09WX	KLM-2417-91/2505-63 OASYS	1
500471102110	CONNECTOR TOP SJ20-11WX	KLM-2415 OASYS	1
500471102110	CONNECTOR TOP SJ20-11WX	KLM-2416 OASYS	1

PART CODE	PART NAME	NOTE	Q'TY
500471102130	CONNECTOR TOP SJ20-13WX	KLM-2417-91/2505-63 OASYS	1
500471102140	CONNECTOR TOP SJ20-14WX	KLM-2417-91/2505-63 OASYS	1
500471103040	CONNECTOR TOP SV40-04WS	KLM-2417-91/2505-63 OASYS	1
500471103080	CONNECTOR TOP SV40-08WS	KLM-2417-91/2505-63 OASYS	1
500472060301	CONNECTOR SIDE S3B-EH (U)	KLM-2304/2305	1
500472060301	CONNECTOR SIDE S3B-EH (U)	KLM-2304/2305 OASYS	1
500472060401	CONNECTOR SIDE S4B-EH (U)	KLM-2304/2305	1
500472060401	CONNECTOR SIDE S4B-EH (U)	KLM-2304/2305 OASYS	1
500472070401	CONNECTOR SIDE S4B-PH-K-S (U)	KLM-2417-91/2505-63 OASYS	1
500472070701	CONNECTOR SIDE S7B-PH-K-S (U)	KLM-2331/32 TRITON ST/EXT88	1
500472071201	CONNECTOR SIDE S12B-PH-K-S (U)	KLM-2417-91/2505-63 OASYS	1
500472091030	CONNECTOR SIDE SC25-03WL	KLM-2660/2661 OASYS	2
500472091060	CONNECTOR SIDE SC25-06WL	KLM-2419/2506/2515 OASYS	1
500472092030	CONNECTOR SIDE SJ20-03WM	KLM-2417-91/2505-63 OASYS	1
500472092030	CONNECTOR SIDE SJ20-03WM	KLM-2419/2506/2515 OASYS	1
500472092040	CONNECTOR SIDE SJ20-04WM	KLM-2660/2661 OASYS	1
500472092050	CONNECTOR SIDE SJ20-05WM	KLM-2417-91/2505-63 OASYS	1
500472092050	CONNECTOR SIDE SJ20-05WM	KLM-2660/2661 OASYS	1
500472092060	CONNECTOR SIDE SJ20-06WM	KLM-2417-91/2505-63 OASYS	1
500472092060	CONNECTOR SIDE SJ20-06WM	KLM-2419/2506/2515 OASYS	1
500472092070	CONNECTOR SIDE SJ20-07WM	KLM-2420 OASYS	1
500472092080	CONNECTOR SIDE SJ20-08WM	KLM-2419/2506/2515 OASYS	1
500472092090	CONNECTOR SIDE SJ20-09WM	KLM-2660/2661 OASYS	1
500472093130	CONNECTOR SIDE SB20-13WL	KLM-2419/2506/2515 OASYS	1
500472093150	CONNECTOR SIDE SB20-15WL	KLM-2417-91/2505-63 OASYS	1
500472093150	CONNECTOR SIDE SB20-15WL	KLM-2419/2506/2515 OASYS	1
500474019600	CONNECTOR 2-215079-0 20P (AMP)	KLM-2331/32 TRITON ST/EXT88	2
500474019700	CONNECTOR 76382-404	KLM-2331/32 TRITON ST/EXT88	2
500474029200	CONNECTOR NCJ6FI-H-0	KLM-2416 OASYS	2
500474032900	CONNECTOR 302A-40PGAS003	KLM-2415 OASYS	1
500474032900	CONNECTOR 302A-40PGAS003	KLM-2416 OASYS	1
500474032900	CONNECTOR 302A-40PGAS003	KLM-2417-91/2505-63 OASYS	2
500474035600	CONNECTOR KX14-50KL7.9H1 (S)	KLM-2417-91/2505-63 OASYS	1
500474039900	D-SUB CONNECTOR DHS10-15K-1100	KLM-2417-91/2505-63 OASYS	1
500474040100	CONNECTOR 88333-044	KLM-2417-91/2505-63 OASYS	1
500474040200	FFC CONNECTOR HFW4R-1STE1 (TS)	KLM-2417-91/2505-63 OASYS	2
500474040300	FFC CONNECTOR HLW4S-2C7	KLM-2417-91/2505-63 OASYS	1
500474040400	FFC CONNECTOR HLW20S-2C7	KLM-2417-91/2505-63 OASYS	1
500474040400	FFC CONNECTOR HLW20S-2C7	KLM-2421/22/92/2651 OASYS	1
500474040500	FFC CONNECTOR HLW24S-2C7	KLM-2417-91/2505-63 OASYS	1
500474040500	FFC CONNECTOR HLW24S-2C7	KLM-2421/22/92/2651 OASYS	1
500474040600	FFC CONNECTOR HLW28R-2C7	KLM-2419/2506/2515 OASYS	1
500474040700	FFC CONNECTOR HLW28S-2C7	KLM-2417-91/2505-63 OASYS	1
500474040800	FFC CONNECTOR HLW30R-2C7	KLM-2420 OASYS	1
500474040900	FFC CONNECTOR HLW30S-2C7	KLM-2417-91/2505-63 OASYS	1
500474041000	CONNECTOR 5597-05APB	KLM-2417-91/2505-63 OASYS	1
500474041100	CONNECTOR 54104-4592 (TS)	KLM-2421/22/92/2651 OASYS	1
500474041200	CONNECTOR 5566-04A	KLM-2417-91/2505-63 OASYS	1
500474041300	CONNECTOR 5566-20A	KLM-2417-91/2505-63 OASYS	1
500474041500	CONNECTOR DF9-31S-1V(20)	KLM-2421/22/92/2651 OASYS	1
500474042100	CONNECTOR BCS-110-L-D-HE	KLM-2421/22/92/2651 OASYS	1
500474042400	D-SUB CONNECTOR 203A-09FGTAAA3	KLM-2660/2661 OASYS	1
500475002197	HARNESS HNS-2197 BOARD IN	KLM-2417-91/2505-63 OASYS	1
500475003412	HARNESS HNS-3412	OASYS 88 M.PART	1
500475003413	HARNESS HNS-3413	OASYS 88 M.PART	1

PART CODE	PART NAME	NOTE	Q'TY
500475003414	HARNESS HNS-3414	OASYS 88 M.PART	1
500475003415	HARNESS HNS-3415	OASYS 88 M.PART	1
500475003416	HARNESS HNS-3416	OASYS 88 M.PART	1
500475003417	HARNESS HNS-3417	OASYS 88 M.PART	1
500475003418	HARNESS HNS-3418	OASYS 88 M.PART	1
500475003419	HARNESS HNS-3419	OASYS 88 M.PART	1
500475003420	HARNESS HNS-3420	OASYS 88 M.PART	1
500475003421	HARNESS HNS-3421	OASYS 88 M.PART	1
500475003422	HARNESS HNS-3422	OASYS 88 M.PART	1
500475003423	HARNESS HNS-3423	OASYS 88 M.PART	1
500475003424	HARNESS HNS-3424	OASYS 88 M.PART	1
500475003425	HARNESS HNS-3425	OASYS 88 M.PART	1
500475003426	HARNESS HNS-3426	OASYS 88 M.PART	1
500475003427	HARNESS HNS-3427	OASYS 88 M.PART	1
500475003428	HARNESS HNS-3428	OASYS 88 M.PART	1
500475003429	HARNESS HNS-3429	OASYS 88 M.PART	1
500475003430	HARNESS HNS-3430	OASYS 88 M.PART	1
500475003431	HARNESS HNS-3431	OASYS 88 M.PART	1
500475003432	HARNESS HNS-3432	OASYS 88 M.PART	1
500475003437	HARNESS HNS-3437	OASYS 88 M.PART	1
500475003445	HARNESS HNS-3445	OASYS 88 M.PART	1
500475003446	HARNESS HNS-3446	OASYS 88 M.PART	1
500475003447	HARNESS HNS-3447	OASYS 88 M.PART	1
500475003448	HARNESS HNS-3448	OASYS 88 M.PART	1
500475003450	HARNESS HNS-3450	OASYS 88 M.PART	1
500475003452	HARNESS HNS-3452	OASYS 88 M.PART	1
500475003453	HARNESS HNS-3453	OASYS 88 M.PART	1
500475003454	HARNESS HNS-3454	OASYS 88 M.PART	1
500475003455	HARNESS HNS-3455	OASYS 88 M.PART	1
500475003456	HARNESS HNS-3456	OASYS 88 M.PART	1
500475003457	HARNESS HNS-3457	OASYS 88 M.PART	1
500475003458	HARNESS HNS-3458	OASYS 88 M.PART	1
500475003459	HARNESS HNS-3459	OASYS 88 M.PART	1
500475003532	HARNESS HNS-3532	OASYS 88 M.PART	1
500475003572	HARNESS HNS-3572	OASYS 88 M.PART	1
500475003573	HARNESS HNS-3573	OASYS 88 M.PART	1
500475008054	HARNESS HNS-8054	OASYS 88 M.PART	1
500475103079	HARNESS HNS-3079 (F) (L=450MM)	OASYS 88 M.PART	2
500480010200	DIN SOCKET YKF51-5046	KLM-2417-91/2505-63 OASYS	1
500500034600	X-0120 CONNECTOR SPACER F41028	OASYS 88 M.PART	1
500500035400	CASE LEG FF025-A4	OASYS 88 M.PART	5
500500035500	X-2100 PCB SPACER 1 KOC-F41205	OASYS 88 M.PART	1
500500035600	X-2100 PCB SPACER 2 KOC-F41206	OASYS 88 M.PART	1
500500035700	X-2100 PCB SPACER 3 KOC-F41207	OASYS 88 M.PART	2
500500035800	X-2100 LCD CUSHION KOC-F41216	OASYS 88 M.PART	2
500500035900	X2100 HINGE CUSHION KOC-F41208	OASYS 88 M.PART	2
500500036400	X-2100 PCB SPACER 4 KOC-F41223	OASYS 88 M.PART	1
500500036600	PCB SPACER CBT-4S0	OASYS 88 M.PART	1
500525000800	DATA LINE FILTER ESD-R-16	OASYS 88 M.PART	1
500525001300	FERRITE CORE NFT-25(WITH CASE)	OASYS 88 M.PART	1
500525002000	FERRITE CORE 7X7X2S WHITE	OASYS 88 M.PART	8
500540020200	INLET SOCKET ST-01G-BF	OASYS 88 M.PART	1
500540026500	X-0100 JS WASHER KOC-F40979	OASYS 88 M.PART	2
500540026600	SHILED FORM 65TS15-1.5 L=30MM	OASYS 88 M.PART	1
500540027200	PCB SPACER RSPS-12U	OASYS 88 M.PART	2

PART CODE	PART NAME	NOTE	Q'TY
500540027300	GASKET E02S050020ET-50 L=50	OASYS 88 M.PART	5
500540027400	GASKET E02S080070ET-60 L=60	OASYS 88 M.PART	2
500540027500	GASKET E02S080070ET-110 L=110	OASYS 88 M.PART	4
500540027600	GASKET E02S080070ET-170 L=170	OASYS 88 M.PART	2
500540027700	GASKET E02S080070ET-320 L=320	OASYS 88 M.PART	1
500540027800	GASKET E02S080055ET-750 L=750	OASYS 88 M.PART	1
500540027900	GASKET E02S100010ET-90 L=90	OASYS 88 M.PART	2
500540028000	GASKET E02S050020ET-215 L=215	OASYS 88 M.PART	1
500540028600	KEYBOARD SPACER KOC-F41248	OASYS 88 M.PART	4
500545050910	FFC HNS-3460	OASYS 88 M.PART	1
500545050920	FFC HNS-3461	OASYS 88 M.PART	1
500545050930	FFC HNS-3462	OASYS 88 M.PART	1
500545050940	FFC HNS-3463	OASYS 88 M.PART	1
500545050950	FFC HNS-3464	OASYS 88 M.PART	1
500545050960	FFC HNS-3465	OASYS 88 M.PART	1
500550015900	X-293/294 PEDAL FELT F40613	OASYS 88 M.PART	1
500550019100	X-0370 KB FELT 4 KOC-F40987	OASYS 88 M.PART	1
500550019400	X-2110 KB FELT 5 KOC-F41031	OASYS 88 M.PART	1
500550019600	X-0120 KB FELT 6 KOC-F41032	OASYS 88 M.PART	1
500550022400	X-2100 PANEL TAPE L F41212-1	OASYS 88 M.PART	1
500550022500	X-2100 PANEL TAPE R F41212-2	OASYS 88 M.PART	1
500550022600	X-2100 PANEL SPACER F41217	OASYS 88 M.PART	2
500550022700	X-2100 LCD CABLE COVER1 F41209	OASYS 88 M.PART	1
500550022800	X-2100 LCD CABLE COVER2 F41210	OASYS 88 M.PART	1
500550023000	X-2100 JS MASK KOC-F41056	OASYS 88 M.PART	1
500550023100	X-2100 FAN DUCT KOC-F30114	OASYS 88 M.PART	1
500560007700	CPU COOLER CJ02JA (COOLJAG)	OASYS 88 M.PART	1
500575016200	LED SPACER LH-5-3 L=3MM	KLM-2417-91/2505-63 OASYS	2
500575016700	LED SPACER LH-3-2	KLM-2417-91/2505-63 OASYS	2
500575017200	LED SPACER LH-5-4 L=4MM	KLM-2417-91/2505-63 OASYS	2
500575019700	LED SPACER LH-5-5 L=5MM	KLM-2419/2506/2515 OASYS	4
500600005400	CORD EC-652-E03	OASYS 88 FR M.PART	1
500600005400	CORD EC-652-E03	OASYS 88 GE M.PART	1
500600005400	CORD EC-652-E03	OASYS 88 WG M.PART	1
500600005700	CORD UC-953-J01	OASYS 88 CN M.PART	1
500600005700	CORD UC-953-J01	OASYS 88 EX M.PART	1
500600005700	CORD UC-953-J01	OASYS 88 US M.PART	1
500600005800	CORD SC-111-J01	OASYS 88 AU M.PART	1
500600006505	CORD TEM-M055-0011 (100JP)	OASYS 88 JP M.PART	1
500600007500	AC CORDSET B06-15020002(UK)	OASYS 88 UK M.PART	1
500620026800	X-410 SVR KNOB GRAY E40239-3	OASYS 88 M.PART	2
500620036000	X610 ENCODER KNOB(BLK)E40466-3	OASYS 88 M.PART	1
500620040700	KNOB P423-90F(X-9100) E40519-1	OASYS 88 M.PART	9
500620045800	X-8410 VR KNOB KOC-E40487-2	OASYS 88 M.PART	2
500620047700	X2100 2LINKAGE KNOB 1 H40207-1	OASYS 88 M.PART	2
500620047800	X2100 2LINKAGE KNOB 2 H40207-2	OASYS 88 M.PART	2
500620047900	X2100 2LINKAGE KNOB 3 H40207-3	OASYS 88 M.PART	2
500620048000	X2100 2LINKAGE KNOB 4 H40207-4	OASYS 88 M.PART	2
500620048100	X-2100 KNOB KOC-H40137-2-GS	OASYS 88 M.PART	13
500620048200	X-2100 KNOB KOC-H40137-1-GS	OASYS 88 M.PART	36
500620048900	X-2100 SLIDER KNOB E40578-2	OASYS 88 M.PART	9
500630041400	X-2100 LCD REFLECTOR E40640	OASYS 88 M.PART	1
500630042200	X-2100 ISOLATION SHEET F41238	OASYS 88 M.PART	1
500630042300	X-2100 LCD SPACER KOC-F41237	OASYS 88 M.PART	4
500641041171	X-013 JACK PLATE KOC-C40692	KLM-2416 OASYS	1

PART CODE	PART NAME	NOTE	Q'TY
500641041258	X-311/312 FSR METAL KOC-C41000	OASYS 88 M.PART	1
500641041436	GND METAL M1866-A	KLM-2417-91/2505-63 OASYS	4
500641041479	X-013 JACK PLATE 5 KOC-C41132	KLM-2417-91/2505-63 OASYS	1
500641041593	X-9200 OP PLATE 2 KOC-C41187	OASYS 88 M.PART	1
500641041623	X-9100 JACK PLATE 2 C41068-2	KLM-2416 OASYS	2
500641041666	X-0390/1310 KB BASE C41239-1	OASYS 88 M.PART	3
500641041884	X-2160 FRONT PANEL KOC-C10247	OASYS 88 M.PART	1
500641041886	X-2160 CORNER PANEL C30657-2	OASYS 88 M.PART	1
500641041887	X-2100 SIDE PLATE L C10245-1	OASYS 88 M.PART	1
500641041888	X-2100 SIDE PLATE R C10245-2	OASYS 88 M.PART	1
500641041889	X-2100 SIDE PLATE ANGLE L	OASYS 88 M.PART	1
500641041890	X-2100 SIDE PLATE ANGLE R	OASYS 88 M.PART	1
500641041892	X-2100 HDD ANGLE KOC-C41385	OASYS 88 M.PART	1
500641041893	X-2100 CD-RW ANGLE KOC-C30665	OASYS 88 M.PART	1
500641041896	X-2100 JS ANGLE KOC-C30663	OASYS 88 M.PART	1
500641041898	X-2100 PAD ANGLE KOC-C30664	OASYS 88 M.PART	1
500641041899	X-2100 PCB SUPPORT 1 C41381-1	OASYS 88 M.PART	2
500641041900	X-2100 PCB SUPPORT 2 C41381-2	OASYS 88 M.PART	5
500641041901	X-2160 AFTERTOUCH ANGLE C41383	OASYS 88 M.PART	1
500641041902	X-2100 FAN ANGLE L C41384-1	OASYS 88 M.PART	1
500641041903	X-2100 FAN ANGLE R C41384-2	OASYS 88 M.PART	1
500641041904	X-2100 JS SUPPORT L KOC-C30660	OASYS 88 M.PART	1
500641041906	X-2160 JS SUPPORT R KOC-C30661	OASYS 88 M.PART	1
500641041907	X-2100 JS GUIDE 2 KOC-C41379	OASYS 88 M.PART	1
500641041908	X-2100 VR PLATE KOC-C41378	OASYS 88 M.PART	2
500641041909	X-2100 SIDE COVER L C30672-1	OASYS 88 M.PART	1
500641041910	X-2100 SIDE COVER R C30672-2	OASYS 88 M.PART	1
500641041927	X-2100 KORG PLATE 5 C41155-5	OASYS 88 M.PART	1
500641041928	X-2100 OP COVER KOC-C41407	OASYS 88 M.PART	1
500641041929	X-2100 LAN COVER KOC-C41409	OASYS 88 M.PART	1
500641041932	X-2100 HINGE ANGLE KOC-C41405	OASYS 88 M.PART	2
500641041933	X-2100 GUIDE RECEPTOR C41406	OASYS 88 M.PART	2
500641041934	X-2160 EMI ANGLE 1 KOC-C30680	OASYS 88 M.PART	1
500641041935	X-2160 EMI ANGLE 2 KOC-C30681	OASYS 88 M.PART	1
500641041936	X-2100 REAR COVER KOC-C30689	OASYS 88 M.PART	1
500641041937	X-2100 LCD TRAY KOC-C20430	OASYS 88 M.PART	1
500641041938	X-2100 PCB COVER KOC-C30677	OASYS 88 M.PART	1
500641041943	X-2160 FRONT BAR ANGLE C41408	OASYS 88 M.PART	1
500641041944	X-2100 EMI ANGLE JS KOC-C41410	OASYS 88 M.PART	1
500641041945	X-2100 LCD FRAME B C30683-1	OASYS 88 M.PART	1
500641041946	X-2100 LCD FRAME C C30683-2	OASYS 88 M.PART	1
500641041947	X-2100 LCD FRAME D KOC-C30684	OASYS 88 M.PART	1
500641041949	X-2160 BOTTOM CASE ASSY H30286	OASYS 88 M.PART	1
500641041951	X-2100 LCD FRAME A ASSY H30290	OASYS 88 M.PART	1
500641041953	X-2100 JS LEVER KOC-C41417	OASYS 88 M.PART	1
500641041954	X-2100 JS PIN KOC-C41418	OASYS 88 M.PART	1
500644008800	GND SPRING (J) KOC-C41125	OASYS 88 M.PART	2
500644010500	X-0100 WHEEL SPRING C41222	OASYS 88 M.PART	2
500646064700	X-311BK CONTROL KNOB ASSY	OASYS 88 M.PART	1
500646065400	X-610/620 SVR FRAME ASSY 30	OASYS 88 M.PART	2
500646066600	X-610 ENCODER FRAME KOC-E40467	OASYS 88 M.PART	1
500646080200	X-0180 JS FRAME KOC-E30272	OASYS 88 M.PART	1
500646080400	X-0180 WHEEL SUPPORT E40533	OASYS 88 M.PART	1
500646080500	X-0180 VR PLATE KOC-E40532	OASYS 88 M.PART	1
500646080600	X-0180 JS LEVER KOC-E40534	OASYS 88 M.PART	1

PART CODE	PART NAME	NOTE	Q'TY
500646086500	X-1450/60 PUSH KNOB KOC-E40564	OASYS 88 M.PART	2
500646096500	X-2100 JS SHAFT KOC-E40618	OASYS 88 M.PART	1
500646096600	X-2100 JS GUIDE 1 KOC-E40619	OASYS 88 M.PART	1
500646096700	X-2100 JS BOX KOC-E30367	OASYS 88 M.PART	1
500646096800	X-2100 JS REFLECTOR KOC-E40622	OASYS 88 M.PART	1
500646096900	X-2100 CDRW COVER KOC-E30366	OASYS 88 M.PART	1
500646097200	X2100 ROTARY VR REFLECTOR ASSY	OASYS 88 M.PART	8
500646097500	X-2100 PAD BUTTON KOC-E40623	OASYS 88 M.PART	8
500646097600	X-2100 PAD CUSHION KOC-E30375	OASYS 88 M.PART	1
500646097700	X-2100 PAD FRAME KOC-E30371-1	OASYS 88 M.PART	1
500646097800	X-2100 JS PANEL KOC-E10219-2	OASYS 88 M.PART	1
500646097900	X-2100 KEY BLOCK KOC-E30351-2	OASYS 88 M.PART	1
500646098000	X2100 SLIDER REFLECTOR ASSY	OASYS 88 M.PART	9
500646098100	X-2100 JS WHEEL KOC-E30270-4	OASYS 88 M.PART	1
500646098200	X-2100 JS COVER KOC-E30271-4	OASYS 88 M.PART	1
500646099500	X-2100 HINGE GUIDE KOC-E40639	OASYS 88 M.PART	2
500646099600	X-2100 CAP KOC-E40641	OASYS 88 M.PART	2
500646099700	X-2100 HINGE COVER KOC-E40638	OASYS 88 M.PART	2
500649013000	BARRIER AT-218-K	OASYS 88 M.PART	1

PART CODE	PART NAME	NOTE	Q'TY
200046362415	PCB ASSY KLM-2415 OASYS	KLM-2415 OASYS	1
200046362416	PCB ASSY KLM-2416 OASYS	KLM-2416 OASYS	1
200046362417	PCB ASSY KLM-2417-91/2505-63	KLM-2417-91/2505-63 OASYS	1
200046362419	PCB ASSY KLM-2419/2506/2515	KLM-2419/2506/2515 OASYS	1
200046362420	PCB ASSY KLM-2420 OASYS	KLM-2420 OASYS	1
200046362421	PCB ASSY KLM-2421/22/92/2651	KLM-2421/22/92/2651 OASYS	1
200046362660	PCB ASSY KLM-2660/2661 OASYS	KLM-2660/2661 OASYS	1
500002186300	LCD INVERTER MSA2022	OASYS 76 M.PART	1
500002186400	LCD ADC BOARD MSA2023	OASYS 76 M.PART	1
500002186600	MOTHER BOARD MX4GVR (AOPEN)	OASYS 76 M.PART	1
500002186700	POWER SUPPLY UNIT PSU-AD130	OASYS 76 M.PART	1
500002187000	DIMM SMD-1G48H-D (PC3200 CL3)	OASYS 76 M.PART	1
500184080390	FUSE R RF73B2ETD 390オ-ム (TS)	KLM-2416 OASYS	2
500304000110	TR 2SA812-T1B (M6) (TS)	KLM-2416 OASYS	1
500304000110	TR 2SA812-T1B (M6) (TS)	KLM-2421/22/92/2651 OASYS	1
500304020150	TR 2SC1623-T1B (L7) (TS)	KLM-2417-91/2505-63 OASYS	9
500304020150	TR 2SC1623-T1B (L7) (TS)	KLM-2660/2661 OASYS	2
500304020230	TR 2SC3661-TA/TB(3K) (TS)	KLM-2416 OASYS	22
500304050140	TR DTC114EKA T146 (TS)	KLM-2416 OASYS	2
500304050140	TR DTC114EKA T146 (TS)	KLM-2417-91/2505-63 OASYS	24
500304050450	TR DTA143TKA (TS)	KLM-2417-91/2505-63 OASYS	2
500304050470	TR 2SB1132T100Q (TS)	KLM-2417-91/2505-63 OASYS	16
500312013600	LED MOB31CR	KLM-2417-91/2505-63 OASYS	2
500312051600	LED SLP-190B-51	KLM-2417-91/2505-63 OASYS	2
500312053500	LED HLMP-NS30-J0000	KLM-2417-91/2505-63 OASYS	2
500312053500	LED HLMP-NS30-J0000	KLM-2419/2506/2515 OASYS	4
500313006200	TOUCH PANEL LCD MSA2021	OASYS 76 M.PART	1
500314001400	DIODE RLS-73 TE-11 (TS)	KLM-2417-91/2505-63 OASYS	5
500314001400	DIODE RLS-73 TE-11 (TS)	KLM-2660/2661 OASYS	2
500314010430	LED HSME-A100-MOLJ1 (TS)	KLM-2421/22/92/2651 OASYS	187
500314028800	LED SLZ-190B-09-T2 (TR)	KLM-2419/2506/2515 OASYS	12
500314028800	LED SLZ-190B-09-T2 (TR)	KLM-2420 OASYS	1
500314030800	LED SLR-325VCT31(TR)	KLM-2419/2506/2515 OASYS	23
500314030800	LED SLR-325VCT31(TR)	KLM-2420 OASYS	29
500314032000	LED SPR-325MVWT31 L/M/N (TR)	KLM-2420 OASYS	2
500314032500	DIODE RB751V-40TE17 (TS)	KLM-2417-91/2505-63 OASYS	3
500314032700	DIODE RB160L-60TE25 (TS)	KLM-2416 OASYS	1
500314033000	DIODE RB521S-30TE61 (TS)	KLM-2417-91/2505-63 OASYS	3
500314034700	DIODE RB441Q-40T-77 (TR)	KLM-2419/2506/2515 OASYS	29
500314034700	DIODE RB441Q-40T-77 (TR)	KLM-2420 OASYS	47
500314034800	LED SML-A12UTT86 (TS)	KLM-2416 OASYS	2
500315000500	DOUBLE DIODE MC-2840-T12-1(TS)	KLM-2417-91/2505-63 OASYS	12
500315001200	DOUBLE DIODE DAN217T146(TS)	KLM-2416 OASYS	11
500320004327	IC HD74HC4051P	KLM-2419/2506/2515 OASYS	3
500320004705	IC HD64F2215TE16V(X2100/60):S	KLM-2417-91/2505-63 OASYS	1
500320009108	IC NJM4556AL (SIP)	KLM-2416 OASYS	1
500320012335	IC MB89935BPFV-G-291-BNDE1:S	KLM-2417-91/2505-63 OASYS	1
500320021156	IC TMS57070FPJ (S)	KLM-2415 OASYS	1
500320051001	IC RK80532PE072512 SL6PF2.8G	OASYS 76 M.PART	1
500320052001	IC VT1712 (S)	KLM-2415 OASYS	1
500324001015	IC UPC4570G2-E2 (TS)	KLM-2417-91/2505-63 OASYS	1
500324003001	IC TC7S32F-TE85L (TS)	KLM-2417-91/2505-63 OASYS	1
500324004057	IC HD74HC153FPEL (TS)	KLM-2415 OASYS	1
500324007026	IC BU2098F-E2 (TS)	KLM-2415 OASYS	1
500324007028	IC BU4227G-TR1 (TS)	KLM-2421/22/92/2651 OASYS	1
500324009019	IC NJM2115M-TE1 (TS)	KLM-2417-91/2505-63 OASYS	1

PART CODE	PART NAME	NOTE	Q'TY
500324009054	IC NJM78M05DL1A-TE1(TS)	KLM-2416 OASYS	2
500324009063	IC NJM2374AM-TE1 (TS)	KLM-2416 OASYS	1
500324011017	IC M5218AFP-600C (TS)	KLM-2417-91/2505-63 OASYS	1
500324018011	IC AK4353VF-E2 (TS)	KLM-2416 OASYS	1
500324018012	IC AK4112BVF-E2 (TS)	KLM-2416 OASYS	1
500324021003	IC TLC2932IPWR (TS)	KLM-2415 OASYS	1
500324021003	IC TLC2932IPWR (TS)	KLM-2416 OASYS	1
500324021032	IC SN74LV4051ANSR (TS)	KLM-2417-91/2505-63 OASYS	2
500324021104	IC SN74LV74APWR (TS)	KLM-2415 OASYS	2
500324021105	IC SN74LV245APWR (TS)	KLM-2415 OASYS	3
500324021105	IC SN74LV245APWR (TS)	KLM-2416 OASYS	3
500324021105	IC SN74LV245APWR (TS)	KLM-2417-91/2505-63 OASYS	2
500324021107	IC SN74LV125APWR (TS)	KLM-2417-91/2505-63 OASYS	1
500324021108	IC SN74LV138APWR (TS)	KLM-2417-91/2505-63 OASYS	3
500324021111	IC SN74LV157APWR (TS)	KLM-2415 OASYS	1
500324021113	IC SN74LV4040APWR (TS)	KLM-2415 OASYS	2
500324021113	IC SN74LV4040APWR (TS)	KLM-2416 OASYS	1
500324021114	IC SN74LV05APWR (TS)	KLM-2417-91/2505-63 OASYS	1
500324021119	IC SN74LV4051APWR (TS)	KLM-2417-91/2505-63 OASYS	1
500324021138	IC SN74LV126APWR (TS)	KLM-2417-91/2505-63 OASYS	1
500324021149	IC NE5532ADR (TS)	KLM-2416 OASYS	14
500324021150	IC SN74AHC1G86DCKR (TS)	KLM-2415 OASYS	1
500324021151	IC SN74AHCT1G04DCKR (TS)	KLM-2415 OASYS	2
500324021151	IC SN74AHCT1G04DCKR (TS)	KLM-2416 OASYS	1
500324021153	IC SN74AHCT245PWR (TS)	KLM-2415 OASYS	2
500324021153	IC SN74AHCT245PWR (TS)	KLM-2416 OASYS	1
500324021154	IC SN74HCT574PWR (TS)	KLM-2417-91/2505-63 OASYS	3
500324021155	IC SN74LV273APWR (TS)	KLM-2417-91/2505-63 OASYS	2
500324021156	IC SN74LV4052APWR (TS)	KLM-2417-91/2505-63 OASYS	1
500324021157	IC SN74LVC139APWR (TS)	KLM-2417-91/2505-63 OASYS	2
500324021158	IC SN74LVC32APWR (TS)	KLM-2417-91/2505-63 OASYS	1
500324021161	IC SN74ACT574PWR (TS)	KLM-2417-91/2505-63 OASYS	2
500324021190	IC SN74LVC1G19DCKR (TS)	KLM-2660/2661 OASYS	1
500324021260	IC SN74AHC1G08DCKR (TS)	KLM-2415 OASYS	1
500324035003	IC AT88SC0204C-S1(TS)	KLM-2415 OASYS	1
500324036013	IC PCM1793DBR (TS)	KLM-2416 OASYS	5
500324036015	IC PCM1802DBR (TS)	KLM-2416 OASYS	2
500324052001	IC HG-106C-FT (TS)	KLM-2417-91/2505-63 OASYS	8
500330003400	OPTICAL MODULE TOTX142L	KLM-2416 OASYS	1
500330003500	OPTICAL MODULE TORX142L	KLM-2416 OASYS	1
500334001900	PHOTO COUPLER PC410LKNIP (TS)	KLM-2417-91/2505-63 OASYS	1
500335011200	X'TAL CA-301 24.576MHZ	KLM-2415 OASYS	1
500335011300	X'TAL CA-301 16.0MHZ	KLM-2417-91/2505-63 OASYS	1
500335011500	X'TAL CA-301 22.5792MHZ	KLM-2415 OASYS	1
500335012400	X'TAL CA-301 8MHZ	KLM-2416 OASYS	1
500335400138	CERAMIC OSC CSTCC10M0G53-R0	KLM-2417-91/2505-63 OASYS	1
500362009007	VR RK11K1140A9L	KLM-2419/2506/2515 OASYS	8
500362009007	VR RK11K1140A9L	KLM-2420 OASYS	1
500362009052	VR RK11K1140D1H	KLM-2304/2305	2
500362009056	VR RK11K1140D27 10KB SPECIAL	KLM-2304/2305 OASYS	2
500362009058	VR RK09K1110 50KSP (F1815071M)	KLM-2416 OASYS	2
500365007800	SVR RS30111AC00N	KLM-2419/2506/2515 OASYS	1
500365009500	SVR EWA NA0C10B14 10KB	KLM-2419/2506/2515 OASYS	1
500365010900	SVR RS45111A6A08	KLM-2419/2506/2515 OASYS	9
500370005000	REC EC11B15204A5	KLM-2420 OASYS	1
500373010300	SLIDE SW SK-12E12G6	KLM-2416 OASYS	2

PART CODE	PART NAME	NOTE	Q'TY
500373010700	SSW SSSS910400	KLM-2417-91/2505-63 OASYS	1
500374000600	TSW EVQ11A09K (TR)	KLM-2419/2506/2515 OASYS	29
500374000600	TSW EVQ11A09K (TR)	KLM-2420 OASYS	47
500374001000	TSW EVQ11A04M (TR)	KLM-2417-91/2505-63 OASYS	1
500375010900	TOUCH SW EVQPAC07K	KLM-2417-91/2505-63 OASYS	2
500375014900	PUSH SW SPUN192600	KLM-2416 OASYS	2
500375016200	PSW JW-L22RKK	OASYS 76 M.PART	1
500402008300	COIL TC131M-1A-6052	KLM-2416 OASYS	1
500402400600	COIL PK0810-331K-UL-T/F(TR)	KLM-2416 OASYS	4
500404000560	INDUCTOR LEM3225T470K (TS)	KLM-2416 OASYS	2
500404001150	BEAD MMZ1608Y102BT-KORG:TS	KLM-2416 OASYS	20
500404001150	BEAD MMZ1608Y102BT-KORG:TS	KLM-2417-91/2505-63 OASYS	16
500404001170	BEAD MMZ1608R102AT (TS)	KLM-2416 OASYS	8
500415004900	BUZZER PKM17EPP-2002-B0	KLM-2417-91/2505-63 OASYS	1
500415005000	KX-2100 SENSER (BLACK)	OASYS 76 M.PART	1
500420004500	KEYBOARD FS-E76	OASYS 76 M.PART	1
500430008484	X-2100/60 CD ROM OACD-R01	OASYS 76 M.PART	1
500430008485	X-2100/60 CD ROM OACD-R02	OASYS 76 M.PART	1
500430008486	X-2100/60 CD ROM OACD-R03	OASYS 76 M.PART	1
500430008487	X-2100/60 CD ROM OACD-R04	OASYS 76 M.PART	1
500435004900	HDD MHT2040AT CA06297-B304 40G	OASYS 76 M.PART	1
500435005000	COMBO DRIVE UJDA760KR-A	OASYS 76 M.PART	1
500437000500	DC FAN 109P1212-H402	OASYS 76 M.PART	1
500450003100	PHONE JACK LGR4609-7000	KLM-2416 OASYS	12
500450003100	PHONE JACK LGR4609-7000	KLM-2417-91/2505-63 OASYS	4
500471070301	CONNECTOR TOP B3B-PH-K-S (U)	KLM-2417-91/2505-63 OASYS	1
500471071201	CONNECTOR TOP B12B-PH-K-S (U)	KLM-2416 OASYS	1
500471071501	CONNECTOR TOP B15B-PH-K-S (U)	KLM-2417-91/2505-63 OASYS	1
500471071601	CONNECTOR TOP B16B-PH-K-S (U)	KLM-2417-91/2505-63 OASYS	1
500471101030	CONNECTOR TOP SC25-03WS	KLM-2416 OASYS	1
500471101030	CONNECTOR TOP SC25-03WS	KLM-2417-91/2505-63 OASYS	2
500471101040	CONNECTOR TOP SC25-04WS	KLM-2417-91/2505-63 OASYS	2
500471101060	CONNECTOR TOP SC25-06WS	KLM-2416 OASYS	2
500471101060	CONNECTOR TOP SC25-06WS	KLM-2417-91/2505-63 OASYS	1
500471101080	CONNECTOR TOP SC25-08WS	KLM-2417-91/2505-63 OASYS	2
500471101110	CONNECTOR TOP SC25-11WS	KLM-2417-91/2505-63 OASYS	1
500471102040	CONNECTOR TOP SJ20-04WX	KLM-2415 OASYS	1
500471102040	CONNECTOR TOP SJ20-04WX	KLM-2417-91/2505-63 OASYS	1
500471102050	CONNECTOR TOP SJ20-05WX	KLM-2415 OASYS	1
500471102050	CONNECTOR TOP SJ20-05WX	KLM-2417-91/2505-63 OASYS	3
500471102060	CONNECTOR TOP SJ20-06WX	KLM-2417-91/2505-63 OASYS	1
500471102070	CONNECTOR TOP SJ20-07WX	KLM-2417-91/2505-63 OASYS	1
500471102080	CONNECTOR TOP SJ20-08WX	KLM-2417-91/2505-63 OASYS	1
500471102090	CONNECTOR TOP SJ20-09WX	KLM-2417-91/2505-63 OASYS	1
500471102110	CONNECTOR TOP SJ20-11WX	KLM-2415 OASYS	1
500471102110	CONNECTOR TOP SJ20-11WX	KLM-2416 OASYS	1
500471102130	CONNECTOR TOP SJ20-13WX	KLM-2417-91/2505-63 OASYS	1
500471102140	CONNECTOR TOP SJ20-14WX	KLM-2417-91/2505-63 OASYS	1
500471103040	CONNECTOR TOP SV40-04WS	KLM-2417-91/2505-63 OASYS	1
500471103080	CONNECTOR TOP SV40-08WS	KLM-2417-91/2505-63 OASYS	1
500472060301	CONNECTOR SIDE S3B-EH (U)	KLM-2304/2305	1
500472060301	CONNECTOR SIDE S3B-EH (U)	KLM-2304/2305 OASYS	1
500472060401	CONNECTOR SIDE S4B-EH (U)	KLM-2304/2305	1
500472060401	CONNECTOR SIDE S4B-EH (U)	KLM-2304/2305 OASYS	1
500472070401	CONNECTOR SIDE S4B-PH-K-S (U)	KLM-2417-91/2505-63 OASYS	1
500472071201	CONNECTOR SIDE S12B-PH-K-S (U)	KLM-2417-91/2505-63 OASYS	1

PART CODE	PART NAME	NOTE	Q'TY
500472091030	CONNECTOR SIDE SC25-03WL	KLM-2660/2661 OASYS	2
500472091060	CONNECTOR SIDE SC25-06WL	KLM-2419/2506/2515 OASYS	1
500472092030	CONNECTOR SIDE SJ20-03WM	KLM-2417-91/2505-63 OASYS	1
500472092030	CONNECTOR SIDE SJ20-03WM	KLM-2419/2506/2515 OASYS	1
500472092040	CONNECTOR SIDE SJ20-04WM	KLM-2660/2661 OASYS	1
500472092050	CONNECTOR SIDE SJ20-05WM	KLM-2417-91/2505-63 OASYS	1
500472092050	CONNECTOR SIDE SJ20-05WM	KLM-2660/2661 OASYS	1
500472092060	CONNECTOR SIDE SJ20-06WM	KLM-2417-91/2505-63 OASYS	1
500472092060	CONNECTOR SIDE SJ20-06WM	KLM-2419/2506/2515 OASYS	1
500472092070	CONNECTOR SIDE SJ20-07WM	KLM-2420 OASYS	1
500472092080	CONNECTOR SIDE SJ20-08WM	KLM-2419/2506/2515 OASYS	1
500472092090	CONNECTOR SIDE SJ20-09WM	KLM-2660/2661 OASYS	1
500472093130	CONNECTOR SIDE SB20-13WL	KLM-2419/2506/2515 OASYS	1
500472093150	CONNECTOR SIDE SB20-15WL	KLM-2417-91/2505-63 OASYS	1
500472093150	CONNECTOR SIDE SB20-15WL	KLM-2419/2506/2515 OASYS	1
500474029200	CONNECTOR NCJ6FI-H-0	KLM-2416 OASYS	2
500474032900	CONNECTOR 302A-40PGAS003	KLM-2415 OASYS	1
500474032900	CONNECTOR 302A-40PGAS003	KLM-2416 OASYS	1
500474032900	CONNECTOR 302A-40PGAS003	KLM-2417-91/2505-63 OASYS	2
500474035600	CONNECTOR KX14-50KL7.9H1 (S)	KLM-2417-91/2505-63 OASYS	1
500474039900	D-SUB CONNECTOR DHS10-15K-1100	KLM-2417-91/2505-63 OASYS	1
500474040100	CONNECTOR 88333-044	KLM-2417-91/2505-63 OASYS	1
500474040200	FFC CONNECTOR HFW4R-1STE1 (TS)	KLM-2417-91/2505-63 OASYS	2
500474040300	FFC CONNECTOR HLW4S-2C7	KLM-2417-91/2505-63 OASYS	1
500474040400	FFC CONNECTOR HLW20S-2C7	KLM-2417-91/2505-63 OASYS	1
500474040400	FFC CONNECTOR HLW20S-2C7	KLM-2421/22/92/2651 OASYS	1
500474040500	FFC CONNECTOR HLW24S-2C7	KLM-2417-91/2505-63 OASYS	1
500474040500	FFC CONNECTOR HLW24S-2C7	KLM-2421/22/92/2651 OASYS	1
500474040600	FFC CONNECTOR HLW28R-2C7	KLM-2419/2506/2515 OASYS	1
500474040700	FFC CONNECTOR HLW28S-2C7	KLM-2417-91/2505-63 OASYS	1
500474040800	FFC CONNECTOR HLW30R-2C7	KLM-2420 OASYS	1
500474040900	FFC CONNECTOR HLW30S-2C7	KLM-2417-91/2505-63 OASYS	1
500474041000	CONNECTOR 5597-05APB	KLM-2417-91/2505-63 OASYS	1
500474041100	CONNECTOR 54104-4592 (TS)	KLM-2421/22/92/2651 OASYS	1
500474041200	CONNECTOR 5566-04A	KLM-2417-91/2505-63 OASYS	1
500474041300	CONNECTOR 5566-20A	KLM-2417-91/2505-63 OASYS	1
500474041500	CONNECTOR DF9-31S-1V(20)	KLM-2421/22/92/2651 OASYS	1
500474042100	CONNECTOR BCS-110-L-D-HE	KLM-2421/22/92/2651 OASYS	1
500474042400	D-SUB CONNECTOR 203A-09FGTAAA1	KLM-2660/2661 OASYS	1
500475002197	HARNESS HNS-2197 BOARD IN	KLM-2417-91/2505-63 OASYS	1
500475003412	HARNESS HNS-3412	OASYS 76 M.PART	1
500475003413	HARNESS HNS-3413	OASYS 76 M.PART	1
500475003414	HARNESS HNS-3414	OASYS 76 M.PART	1
500475003415	HARNESS HNS-3415	OASYS 76 M.PART	1
500475003416	HARNESS HNS-3416	OASYS 76 M.PART	1
500475003417	HARNESS HNS-3417	OASYS 76 M.PART	1
500475003418	HARNESS HNS-3418	OASYS 76 M.PART	1
500475003419	HARNESS HNS-3419	OASYS 76 M.PART	1
500475003420	HARNESS HNS-3420	OASYS 76 M.PART	1
500475003421	HARNESS HNS-3421	OASYS 76 M.PART	1
500475003422	HARNESS HNS-3422	OASYS 76 M.PART	1
500475003423	HARNESS HNS-3423	OASYS 76 M.PART	1
500475003424	HARNESS HNS-3424	OASYS 76 M.PART	1
500475003425	HARNESS HNS-3425	OASYS 76 M.PART	1
500475003426	HARNESS HNS-3426	OASYS 76 M.PART	1
500475003427	HARNESS HNS-3427	OASYS 76 M.PART	1

PART CODE	PART NAME	NOTE	Q'TY
500475003428	HARNESS HNS-3428	OASYS 76 M.PART	1
500475003429	HARNESS HNS-3429	OASYS 76 M.PART	1
500475003430	HARNESS HNS-3430	OASYS 76 M.PART	1
500475003431	HARNESS HNS-3431	OASYS 76 M.PART	1
500475003432	HARNESS HNS-3432	OASYS 76 M.PART	1
500475003433	HARNESS HNS-3433	OASYS 76 M.PART	1
500475003434	HARNESS HNS-3434	OASYS 76 M.PART	1
500475003435	HARNESS HNS-3435	OASYS 76 M.PART	1
500475003436	HARNESS HNS-3436	OASYS 76 M.PART	1
500475003437	HARNESS HNS-3437	OASYS 76 M.PART	1
500475003438	HARNESS HNS-3438	OASYS 76 M.PART	1
500475003440	HARNESS HNS-3440	OASYS 76 M.PART	1
500475003441	HARNESS HNS-3441	OASYS 76 M.PART	1
500475003442	HARNESS HNS-3442	OASYS 76 M.PART	1
500475003444	HARNESS HNS-3444	OASYS 76 M.PART	1
500475003455	HARNESS HNS-3455	OASYS 76 M.PART	1
500475003457	HARNESS HNS-3457	OASYS 76 M.PART	1
500475003458	HARNESS HNS-3458	OASYS 76 M.PART	1
500475003459	HARNESS HNS-3459	OASYS 76 M.PART	1
500475003531	HARNESS HNS-3531	OASYS 76 M.PART	1
500475003570	HARNESS HNS-3570	OASYS 76 M.PART	1
500475003571	HARNESS HNS-3571	OASYS 76 M.PART	1
500475008054	HARNESS HNS-8054	OASYS 76 M.PART	1
500480010200	DIN SOCKET YKF51-5046	KLM-2417-91/2505-63 OASYS	1
500500034600	X-0120 CONNECTOR SPACER F41028	OASYS 76 M.PART	1
500500035400	CASE LEG FF025-A4	OASYS 76 M.PART	4
500500035500	X-2100 PCB SPACER 1 KOC-F41205	OASYS 76 M.PART	1
500500035600	X-2100 PCB SPACER 2 KOC-F41206	OASYS 76 M.PART	1
500500035700	X-2100 PCB SPACER 3 KOC-F41207	OASYS 76 M.PART	2
500500035800	X-2100 LCD CUSHION KOC-F41216	OASYS 76 M.PART	2
500500035900	X2100 HINGE CUSHION KOC-F41208	OASYS 76 M.PART	2
500500036400	X-2100 PCB SPACER 4 KOC-F41223	OASYS 76 M.PART	1
500500036600	PCB SPACER CBT-4S0	OASYS 76 M.PART	1
500525000800	DATA LINE FILTER ESD-R-16	OASYS 76 M.PART	1
500525001300	FERRITE CORE NFT-25(WITH CASE)	OASYS 76 M.PART	1
500525002000	FERRITE CORE 7X7X2S WHITE	OASYS 76 M.PART	8
500540020200	INLET SOCKET ST-01G-BF	OASYS 76 M.PART	1
500540026500	X-0100 JS WASHER KOC-F40979	OASYS 76 M.PART	2
500540026600	SHILED FORM 65TS15-1.5 L=30MM	OASYS 76 M.PART	1
500540027200	PCB SPACER RSPS-12U	OASYS 76 M.PART	2
500540027300	GASKET E02S050020ET-50 L=50	OASYS 76 M.PART	4
500540027400	GASKET E02S080070ET-60 L=60	OASYS 76 M.PART	2
500540027500	GASKET E02S080070ET-110 L=110	OASYS 76 M.PART	3
500540027600	GASKET E02S080070ET-170 L=170	OASYS 76 M.PART	1
500540027700	GASKET E02S080070ET-320 L=320	OASYS 76 M.PART	1
500540027900	GASKET E02S100010ET-90 L=90	OASYS 76 M.PART	2
500540028000	GASKET E02S050020ET-215 L=215	OASYS 76 M.PART	1
500540028600	KEYBOARD SPACER KOC-F41248	M.PART	1
500545050910	FFC HNS-3460	OASYS 76 M.PART	1
500545050920	FFC HNS-3461	OASYS 76 M.PART	1
500545050930	FFC HNS-3462	OASYS 76 M.PART	1
500545050940	FFC HNS-3463	OASYS 76 M.PART	1
500545050950	FFC HNS-3464	OASYS 76 M.PART	1
500545050960	FFC HNS-3465	OASYS 76 M.PART	1
500550015900	X-293/294 PEDAL FELT F40613	OASYS 76 M.PART	1
500550022400	X-2100 PANEL TAPE L F41212-1	OASYS 76 M.PART	1

PART CODE	PART NAME	NOTE	Q'TY
500550022500	X-2100 PANEL TAPE R F41212-2	OASYS 76 M.PART	1
500550022600	X-2100 PANEL SPACER F41217	OASYS 76 M.PART	2
500550022700	X-2100 LCD CABLE COVER1 F41209	OASYS 76 M.PART	1
500550022800	X-2100 LCD CABLE COVER2 F41210	OASYS 76 M.PART	1
500550023000	X-2100 JS MASK KOC-F41056	OASYS 76 M.PART	1
500550023100	X-2100 FAN DUCT KOC-F30114	OASYS 76 M.PART	1
500560007700	CPU COOLER CJ02JA (COOLJAG)	OASYS 76 M.PART	1
500575016200	LED SPACER LH-5-3 L=3MM	KLM-2417-91/2505-63 OASYS	2
500575016700	LED SPACER LH-3-2	KLM-2417-91/2505-63 OASYS	2
500575017200	LED SPACER LH-5-4 L=4MM	KLM-2417-91/2505-63 OASYS	2
500575019700	LED SPACER LH-5-5 L=5MM	KLM-2419/2506/2515 OASYS	4
500600005400	CORD EC-652-E03	OASYS 76 FR M.PART	1
500600005400	CORD EC-652-E03	OASYS 76 GE M.PART	1
500600005400	CORD EC-652-E03	OASYS 76 WG M.PART	1
500600005700	CORD UC-953-J01	OASYS 76 CN M.PART	1
500600005700	CORD UC-953-J01	OASYS 76 EX M.PART	1
500600005700	CORD UC-953-J01	OASYS 76 US M.PART	1
500600005800	CORD SC-111-J01	OASYS 76 AU M.PART	1
500600006505	CORD TEM-M055-0011 (100JP)	OASYS 76 JP M.PART	1
500600007500	AC CORDSET B06-15020002(UK)	OASYS 76 UK M.PART	1
500620026800	X-410 SVR KNOB GRAY E40239-3	OASYS 76 M.PART	2
500620036000	X610 ENCODER KNOB(BLK)E40466-3	OASYS 76 M.PART	1
500620040700	KNOB P423-90F(X-9100) E40519-1	OASYS 76 M.PART	9
500620045800	X-8410 VR KNOB KOC-E40487-2	OASYS 76 M.PART	2
500620047700	X2100 2LINKAGE KNOB 1 H40207-1	OASYS 76 M.PART	2
500620047800	X2100 2LINKAGE KNOB 2 H40207-2	OASYS 76 M.PART	2
500620047900	X2100 2LINKAGE KNOB 3 H40207-3	OASYS 76 M.PART	2
500620048000	X2100 2LINKAGE KNOB 4 H40207-4	OASYS 76 M.PART	2
500620048100	X-2100 KNOB KOC-H40137-2-GS	OASYS 76 M.PART	13
500620048200	X-2100 KNOB KOC-H40137-1-GS	OASYS 76 M.PART	36
500620048900	X-2100 SLIDER KNOB E40578-2	OASYS 76 M.PART	9
500630041400	X-2100 LCD REFLECTOR E40640	OASYS 76 M.PART	1
500630042200	X-2100 ISOLATION SHEET F41238	OASYS 76 M.PART	1
500630042300	X-2100 LCD SPACER KOC-F41237	OASYS 76 M.PART	4
500641041171	X-013 JACK PLATE KOC-C40692	KLM-2416 OASYS	1
500641041258	X-311/312 FSR METAL KOC-C41000	OASYS 76 M.PART	1
500641041436	GND METAL M1866-A	KLM-2417-91/2505-63 OASYS	4
500641041479	X-013 JACK PLATE 5 KOC-C41132	KLM-2417-91/2505-63 OASYS	1
500641041593	X-9200 OP PLATE 2 KOC-C41187	OASYS 76 M.PART	1
500641041623	X-9100 JACK PLATE 2 C41068-2	KLM-2416 OASYS	2
500641041883	X-2100 FRONT PANEL KOC-C10246	OASYS 76 M.PART	1
500641041885	X-2100 CORNER PANEL C30657-1	OASYS 76 M.PART	1
500641041887	X-2100 SIDE PLATE L C10245-1	OASYS 76 M.PART	1
500641041888	X-2100 SIDE PLATE R C10245-2	OASYS 76 M.PART	1
500641041889	X-2100 SIDE PLATE ANGLE L	OASYS 76 M.PART	1
500641041890	X-2100 SIDE PLATE ANGLE R	OASYS 76 M.PART	1
500641041891	X-2100 KB ANGLE R KOC-C41386	OASYS 76 M.PART	1
500641041892	X-2100 HDD ANGLE KOC-C41385	OASYS 76 M.PART	1
500641041893	X-2100 CD-RW ANGLE KOC-C30665	OASYS 76 M.PART	1
500641041894	X-2100 CD-RW ANGLE 2 C41382	OASYS 76 M.PART	1
500641041895	X-2100 KBR ANGLE KOC-C30659	OASYS 76 M.PART	1
500641041896	X-2100 JS ANGLE KOC-C30663	OASYS 76 M.PART	1
500641041897	X-2100 KBF ANGLE KOC-C30658	OASYS 76 M.PART	2
500641041898	X-2100 PAD ANGLE KOC-C30664	OASYS 76 M.PART	1
500641041899	X-2100 PCB SUPPORT 1 C41381-1	OASYS 76 M.PART	2
500641041900	X-2100 PCB SUPPORT 2 C41381-2	OASYS 76 M.PART	5

PART CODE	PART NAME	NOTE	Q'TY
500641041902	X-2100 FAN ANGLE L C41384-1	OASYS 76 M.PART	1
500641041903	X-2100 FAN ANGLE R C41384-2	OASYS 76 M.PART	1
500641041904	X-2100 JS SUPPORT L KOC-C30660	OASYS 76 M.PART	1
500641041905	X-2100 JS SUPPORT R KOC-C30662	OASYS 76 M.PART	1
500641041907	X-2100 JS GUIDE 2 KOC-C41379	OASYS 76 M.PART	1
500641041908	X-2100 VR PLATE KOC-C41378	OASYS 76 M.PART	2
500641041909	X-2100 SIDE COVER L C30672-1	OASYS 76 M.PART	1
500641041910	X-2100 SIDE COVER R C30672-2	OASYS 76 M.PART	1
500641041927	X-2100 KORG PLATE 5 C41155-5	OASYS 76 M.PART	1
500641041928	X-2100 OP COVER KOC-C41407	OASYS 76 M.PART	1
500641041929	X-2100 LAN COVER KOC-C41409	OASYS 76 M.PART	1
500641041930	X-2100 EMI ANGLE 1 KOC-C30678	OASYS 76 M.PART	1
500641041931	X-2100 EMI ANGLE 2 KOC-C30679	OASYS 76 M.PART	1
500641041932	X-2100 HINGE ANGLE KOC-C41405	OASYS 76 M.PART	2
500641041933	X-2100 GUIDE RECEPTOR C41406	OASYS 76 M.PART	2
500641041936	X-2100 REAR COVER KOC-C30689	OASYS 76 M.PART	1
500641041937	X-2100 LCD TRAY KOC-C20430	OASYS 76 M.PART	1
500641041938	X-2100 PCB COVER KOC-C30677	OASYS 76 M.PART	1
500641041944	X-2100 EMI ANGLE JS KOC-C41410	OASYS 76 M.PART	1
500641041945	X-2100 LCD FRAME B C30683-1	OASYS 76 M.PART	1
500641041946	X-2100 LCD FRAME C C30683-2	OASYS 76 M.PART	1
500641041947	X-2100 LCD FRAME D KOC-C30684	OASYS 76 M.PART	1
500641041948	X-2100 BOTTOM CASE ASSY H30283	OASYS 76 M.PART	1
500641041951	X-2100 LCD FRAME A ASSY H30290	OASYS 76 M.PART	1
500641041953	X-2100 JS LEVER KOC-C41417	OASYS 76 M.PART	1
500641041954	X-2100 JS PIN KOC-C41418	OASYS 76 M.PART	1
500644008800	GND SPRING (J) KOC-C41125	OASYS 76 M.PART	2
500644010500	X-0100 WHEEL SPRING C41222	OASYS 76 M.PART	2
500646064700	X-311BK CONTROL KNOB ASSY	OASYS 76 M.PART	1
500646065400	X-610/620 SVR FRAME ASSY 30	OASYS 76 M.PART	2
500646066600	X-610 ENCODER FRAME KOC-E40467	OASYS 76 M.PART	1
500646080200	X-0180 JS FRAME KOC-E30272	OASYS 76 M.PART	1
500646080400	X-0180 WHEEL SUPPORT E40533	OASYS 76 M.PART	1
500646080500	X-0180 VR PLATE KOC-E40532	OASYS 76 M.PART	1
500646080600	X-0180 JS LEVER KOC-E40534	OASYS 76 M.PART	1
500646086500	X-1450/60 PUSH KNOB KOC-E40564	OASYS 76 M.PART	2
500646096500	X-2100 JS SHAFT KOC-E40618	OASYS 76 M.PART	1
500646096600	X-2100 JS GUIDE 1 KOC-E40619	OASYS 76 M.PART	1
500646096700	X-2100 JS BOX KOC-E30367	OASYS 76 M.PART	1
500646096800	X-2100 JS REFLECTOR KOC-E40622	OASYS 76 M.PART	1
500646096900	X-2100 CDRW COVER KOC-E30366	OASYS 76 M.PART	1
500646097200	X2100 ROTARY VR REFLECTOR ASSY	OASYS 76 M.PART	8
500646097500	X-2100 PAD BUTTON KOC-E40623	OASYS 76 M.PART	8
500646097600	X-2100 PAD CUSHION KOC-E30375	OASYS 76 M.PART	1
500646097700	X-2100 PAD FRAME KOC-E30371-1	OASYS 76 M.PART	1
500646097800	X-2100 JS PANEL KOC-E10219-2	OASYS 76 M.PART	1
500646097900	X-2100 KEY BLOCK KOC-E30351-2	OASYS 76 M.PART	1
500646098000	X2100 SLIDER REFLECTOR ASSY	OASYS 76 M.PART	9
500646098100	X-2100 JS WHEEL KOC-E30270-4	OASYS 76 M.PART	1
500646098200	X-2100 JS COVER KOC-E30271-4	OASYS 76 M.PART	1
500646099500	X-2100 HINGE GUIDE KOC-E40639	OASYS 76 M.PART	2
500646099600	X-2100 CAP KOC-E40641	OASYS 76 M.PART	2
500646099700	X-2100 HINGE COVER KOC-E40638	OASYS 76 M.PART	2
500649013000	BARRIER AT-218-K	OASYS 76 M.PART	1